CONFIDENTIAL AND PROPRIETARY - QUALCOMM TECHNOLOGIES, INC.
NOT TO BE USED, COPIED, REPRODUCED, OR MODIFIED IN WHOLE OR IN PART, NOR ITS CONTENTS REVEALED IN ANY MANNER TO OTHERS WITHOUT THE EXPRESS WRITTEN PERMISSION OF QUALCOMM TECHNOLOGIES, INC.
THIS TECHNICAL DATA MAY BE SUBJECT TO U.S. AND INTERNATIONAL EXPORT, RE-EXPORT, OR TRANSFER ("EXPORT") LAWS. DIVERSION CONTRARY TO U.S. AND INTERNATIONAL LAW IS STRICTLY PROHIBITED.

REVISIONS

LTR	DESCRIPTION	DATE	APPROVED
A	INITIAL RELEASE		

SHEET BLOCK	SCHEMATIC	SHEET BLOCK	SCHEMATIC	SHEET BLOCK	SCHEMATIC	SHEET BLOCK	SCHEMATIC
1	TITLE	51	Reserved_6				
2	TABLE_OF_CONTENTS	52	Reserved_7				
3	GPIO TABLE	53	QPA8687				
4	BLOCK DIAGRAM	54	DRX_QDM2302				
5	SM4250 CONTROL	55	DRX_Reserved_1				
6	SM4250 GPIO	56	DRX_Reserved_2				
7	SM4250 LP GPIO	57	DRX_Reserved_3				
8	SM4250 EBI0/1	58	DRX_Reserved_4				
9	SM4250 MIPI-CSI/DSI	59	QAT3522				
10	SM4250 WCSS/RF	60	QAT3518_DRX_ANT1				
11	SM4250 PWR_1	61	WCN3950_SH				
12	SM4250 PWR_2	62	WLAN_RF_SH				
13	SM4250 PWR_3	63	WCS_NFC_SN100U				
14	SM4250 GND	64	SHEILDING_FRAME				
15	PM4250 HK/IO	65	CHANGE LIST				
16	PM4250_Bucks_S1-S4						
17	PM4250_Bucks_S5-S8						
18	PM4250_LDOs						
19	PMI632_Control						
20	PMI632_Charger/PD PHY						
21	PMI632_LCD/VIB/RGB/Flash						
22	SMB1355						
23	eMCP/uMCP						
24	eMCP_POWER						
25	WCD9370						
26	AUDIO						
27	DISPLAY						
28	FRONT CAMERA						
29	REAR CAMERA						
30	CAM eLDO						
31	Sensors						
32	PM8008 CAM_LDO						
33	SIM/SD						
34	KEYPAD/INDICATOR						
35	BATT/B2B						
36	Audio over Type C						
37	RCM/DEBUG						
38	SDR480_POWER						
39	SDR480_GND						
40	SDR480_PRX_DRX_FBRX						
41	QPA8673						
42	QET4101						
43	Reserved_4						
44	Reserved_5						
45	PRx_HB						
46	PRx_MB						
47	PRx_LB						
48							
49							
50							

TABLE_OF_CONTENTS

Title: Page Name = 01_TABLE_OF_CONTENTS
REV: 10
DOCUMENT NO.: Design Name = S88731_1_12_20200730_1584
Size: Custom
DEPARTMENT:
DESIGNER: DESIGNER = zhangliejiang
Date: Page Modify Date = Monday, July 27, 2020
Sheet 1 of 84

VERSION	EDITED BY	LAST EDIT DATE
1	LAST_EDITOR	2-23-2007_10:06

CONFIDENTIAL AND PROPRIETARY - QUALCOMM TECHNOLOGIES, INC.
NOT TO BE USED, COPIED, REPRODUCED, OR MODIFIED IN WHOLE OR IN PART, NOR ITS CONTENTS REVEALED IN ANY MANNER TO OTHERS WITHOUT THE EXPRESS WRITTEN PERMISSION OF QUALCOMM TECHNOLOGIES, INC.
THIS TECHNICAL DATA MAY BE SUBJECT TO U.S. AND INTERNATIONAL EXPORT, RE-EXPORT, OR TRANSFER ("EXPORT") LAWS. DIVERSION CONTRARY TO U.S. AND INTERNATIONAL LAW IS STRICTLY PROHIBITED.

REVISIONS

LTR	DESCRIPTION	DATE	APPROVED
A	INITIAL RELEASE		

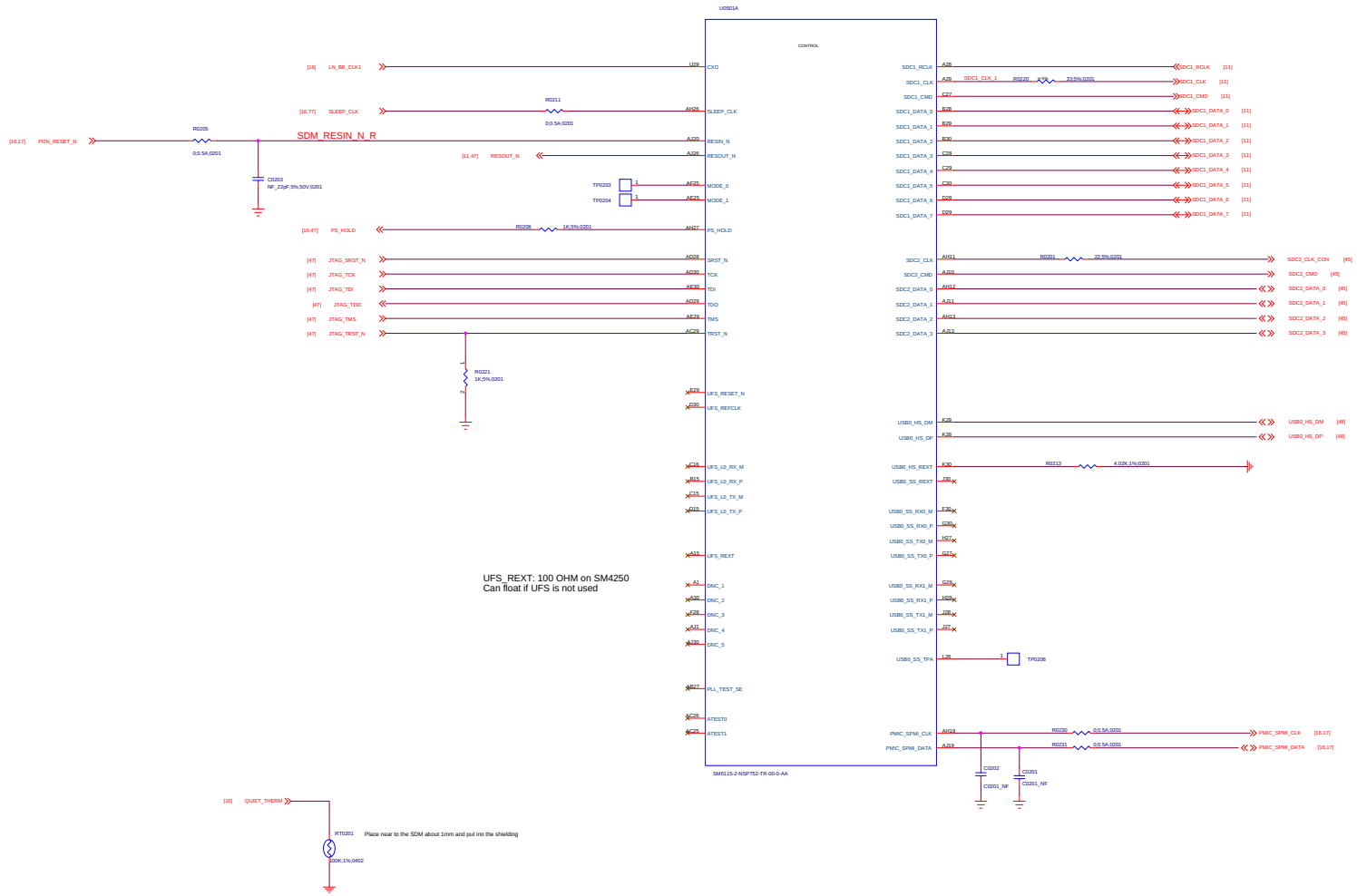

Title: Page Name = 02_SM4250 CONTROL
DOCUMENT NO.: Design Name = 588731_1_12_20200730_084 Custom
DEPARTMENT: DESIGNER = zhanglieqiang
Date: Page Modify Date = Monday, July 27, 2020 Sheet 2 of 84

VERSION	EDITED BY	LAST EDIT DATE
1	LAST_EDITOR	2-23-2007_10:06

CONFIDENTIAL AND PROPRIETARY - QUALCOMM TECHNOLOGIES, INC.
NOT TO BE USED, COPIED, REPRODUCED, OR MODIFIED IN WHOLE OR IN PART, NOR ITS CONTENTS REVEALED IN ANY MANNER TO OTHERS WITHOUT THE EXPRESS WRITTEN PERMISSION OF QUALCOMM TECHNOLOGIES, INC.
THIS TECHNICAL DATA MAY BE SUBJECT TO U.S. AND INTERNATIONAL EXPORT, RE-EXPORT, OR TRANSFER ("EXPORT") LAWS. DIVERSION CONTRARY TO U.S. AND INTERNATIONAL LAW IS STRICTLY PROHIBITED.

REVISIONS			
LTR	DESCRIPTION	DATE	APPROVED
A	INITIAL RELEASE		

I2C BUS PULL-UPs

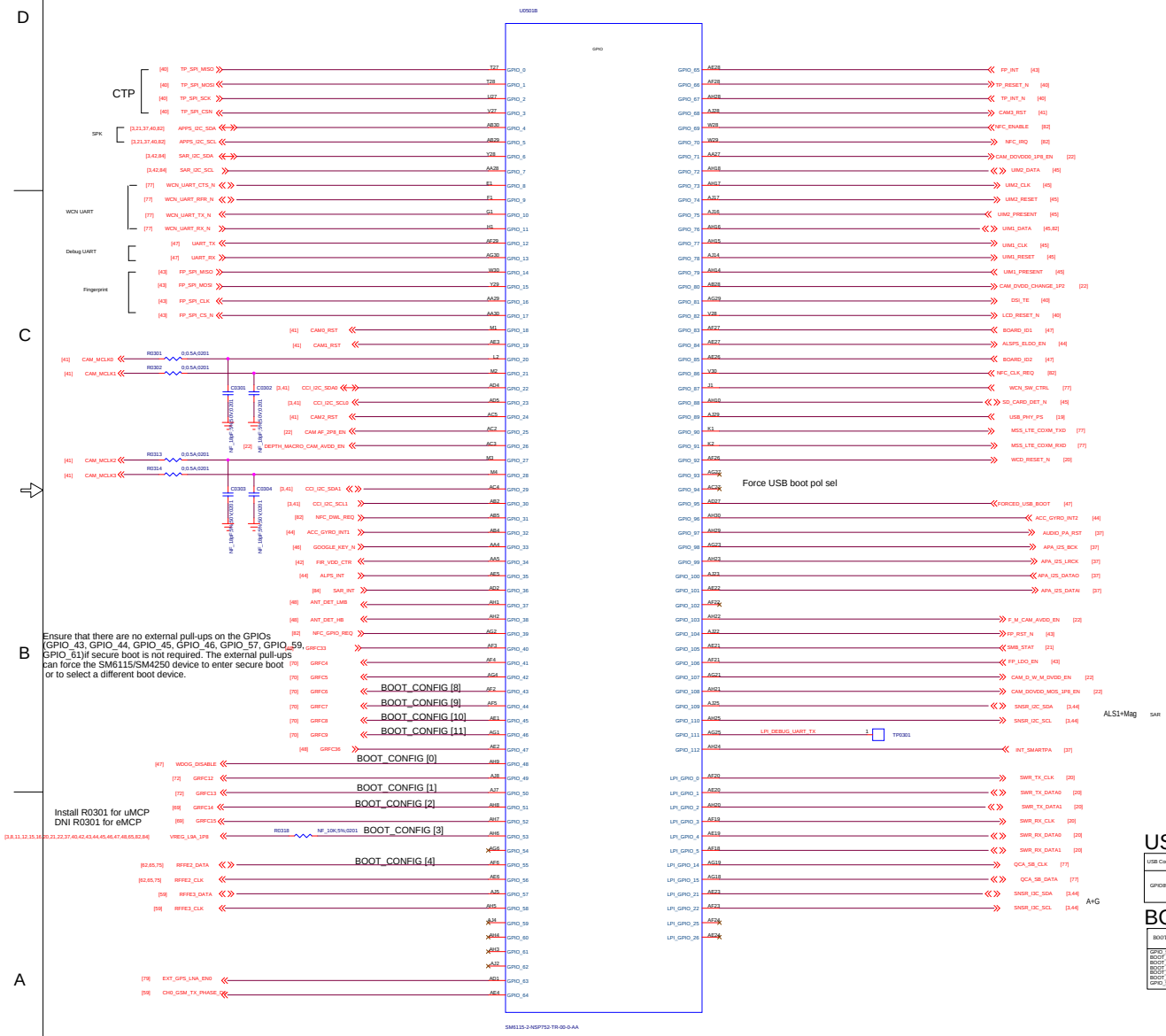

Ensure that there are no external pull-ups on the GPIOs (GPIO_43, GPIO_44, GPIO_45, GPIO_46, GPIO_57, GPIO_59, GPIO_61)if secure boot is not required. The external pull-ups can force the SM6115/SM4250 device to enter secure boot or to select a different boot device.

Install R0301 for uMCP
DNI R0301 for eMCP

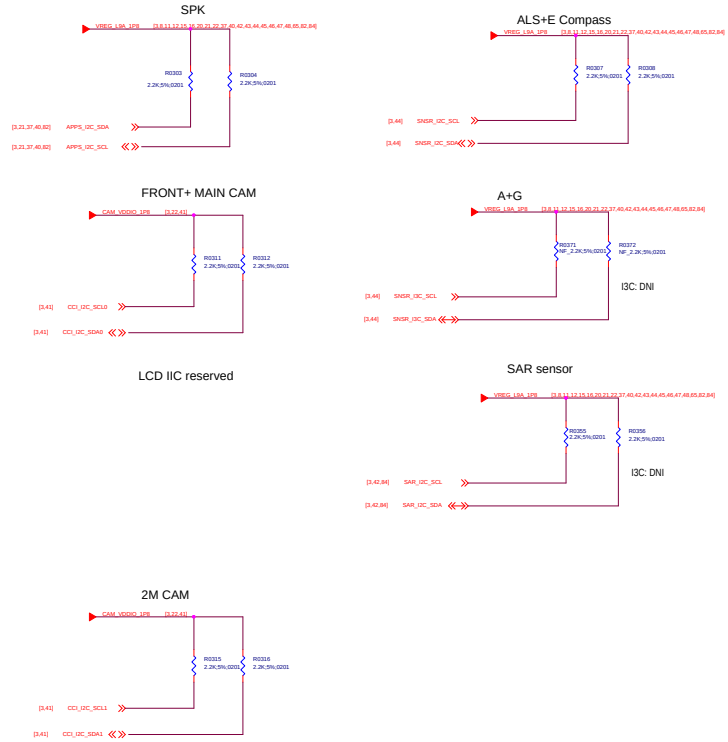

USB CONFIG

USB Config	TYPE-C	Mirco USB
GPIO89	NET TO PHYS	10KPull to GND

FORCE_USB_BOOT	FORCE_USB_POLARITY_SEL	FORCE_USB_BOOT FUCTION
GND	GND	Normal Boot -Legacy
PULLED UP	GND	EDL Mode -Legacy
PULLED UP	PULLED UP	Normal Boot -Polarity Invension
GND	PULLED UP	EDL Mode -Polarity Invension

BOOT CONFIG

BOOT CONFIG GPIOs	FUNCTIONALITY
GPIO_95	FORCED_USB_BOOT
BOOT_CONFIG[0]: GPIO_48	WDOG_DISABLE
BOOT_CONFIG[1]: GPIO_50	FASTBOOT_SEL[0]
BOOT_CONFIG[2]: GPIO_51	FASTBOOT_SEL[1]
BOOT_CONFIG[3]: GPIO_52	FASTBOOT_SEL[2]
BOOT_CONFIG[4]: GPIO_59	FASTBOOT_SEL[3]
GPIO_94	FORCED_USB_BOOT_POL_SEL

FASTBOOT_SEL

FASTBOOT_SEL[3:1]	BOOT OPTIONS
0b0000	0: Default (eMMC -> SD -> eDL (eDL path- USB only)
0b0001	1: SD -> eMMC-> eDL (eDL path USB only)
0b0010	2: SD -> eDL (eDL path- USB only)
0b0011	3: USB -> eDL (eDL path- SD then USB)
0b0100	5: UFS HS G1 -> SD -> eDL (eDL path- USB only)
0b0101	4: SD -> UFS HS G1 -> eDL (eDL path USB only)
0b1100	6: UFS HS G1 -> eDL (eDL path- USB only)
0b0111	7: eMMC -> SD -> eDL(eDL path-USB only)
0b1000	8: eMMC -> eDL (eDL path - USB only)

Title	Page Name = 03_SM4250 GPIO	REV: V10	
DOCUMENT NO.:	Design Name = 588733_1_12_20200730_0844	SIZE: Custom	
DEPARTMENT:	DESIGNER = zhanglanjiang		
Date:	Page Modify Date = Monday, July 27, 2020	Sheet 3 of 84	

VERSION	EDITED BY	LAST EDIT DATE
1	LAST_EDITOR	2-23-2007_10:06

CONFIDENTIAL AND PROPRIETARY - QUALCOMM TECHNOLOGIES, INC.
NOT TO BE USED, COPIED, REPRODUCED, OR MODIFIED IN WHOLE OR IN PART, NOR ITS CONTENTS REVEALED IN ANY MANNER TO OTHERS WITHOUT THE EXPRESS WRITTEN PERMISSION OF QUALCOMM TECHNOLOGIES, INC.
THIS TECHNICAL DATA MAY BE SUBJECT TO U.S. AND INTERNATIONAL EXPORT, RE-EXPORT, OR TRANSFER ("EXPORT") LAWS. DIVERSION CONTRARY TO U.S. AND INTERNATIONAL LAW IS STRICTLY PROHIBITED.

REVISIONS

LTR	DESCRIPTION	DATE	APPROVED
A	INITIAL RELEASE		

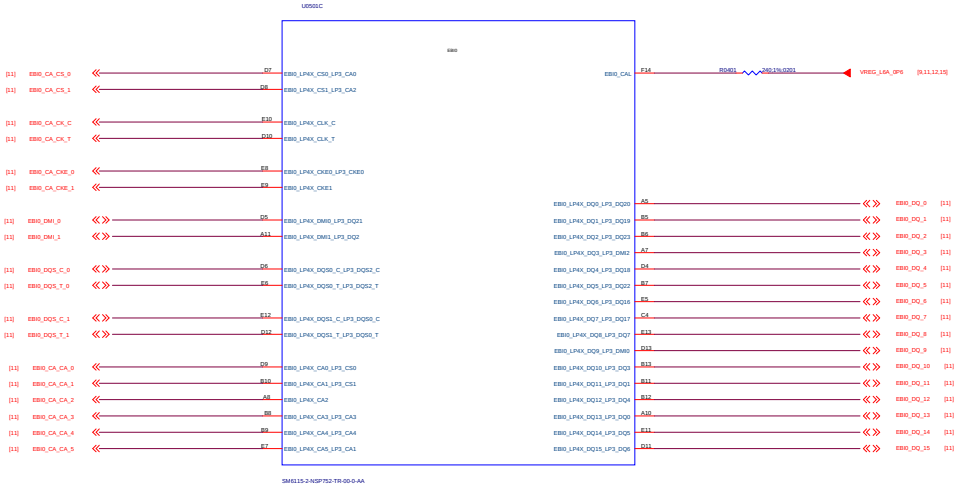

SM6125 EBI0/1

Title	Page Name = 04_SM4250 EBI0/1
DOCUMENT NO.:	Design Name = S86731_1_12_20200723_SM4
DEPARTMENT:	DESIGNER = zhangfaejiang
Date:	Page Modify Date = Monday, July 27, 2020
Sheet	4 of 84
Rev	1
Size	Custom

VERSION	EDITED BY	LAST EDIT DATE
1	LAST_EDITOR	2-23-2007_10:06

CONFIDENTIAL AND PROPRIETARY - QUALCOMM TECHNOLOGIES, INC.
NOT TO BE USED, COPIED, REPRODUCED, OR MODIFIED IN WHOLE OR IN PART, NOR ITS CONTENTS REVEALED IN ANY MANNER TO OTHERS WITHOUT THE EXPRESS WRITTEN PERMISSION OF QUALCOMM TECHNOLOGIES, INC.
THIS TECHNICAL DATA MAY BE SUBJECT TO U.S. AND INTERNATIONAL EXPORT, RE-EXPORT, OR TRANSFER ("EXPORT") LAWS. DIVERSION CONTRARY TO U.S. AND INTERNATIONAL LAW IS STRICTLY PROHIBITED.

REVISIONS

LTR	DESCRIPTION	DATE	APPROVED
A	INITIAL RELEASE		

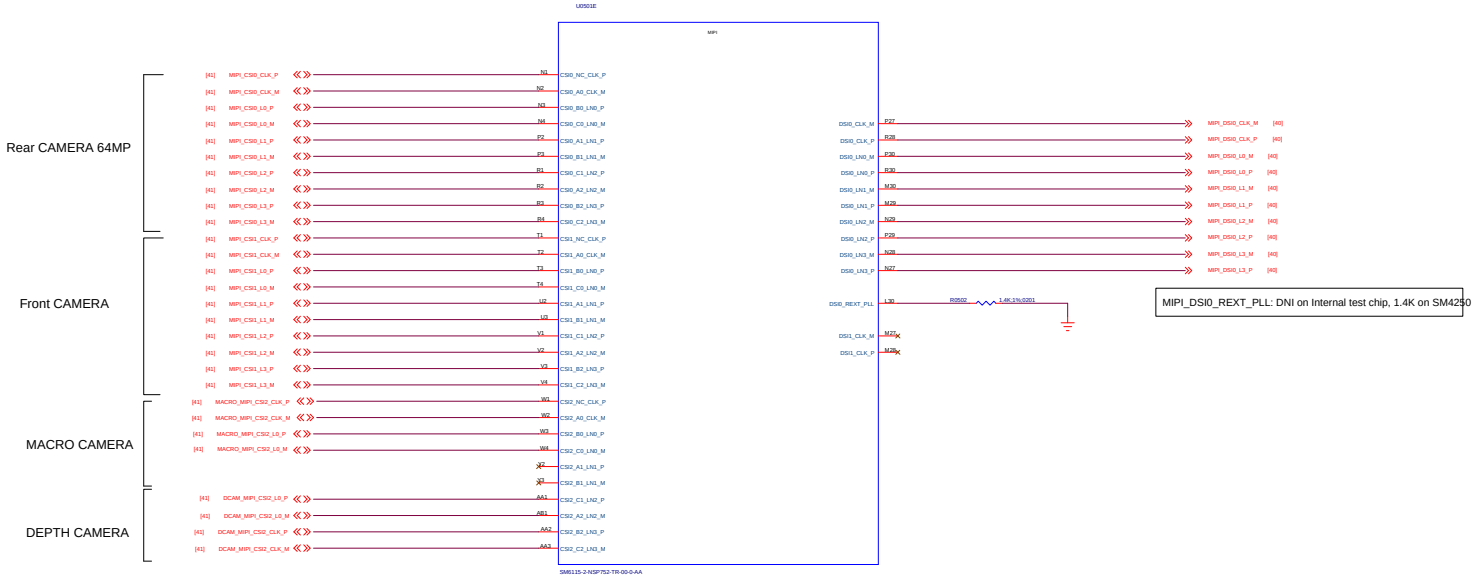

Title	Page Name = 05_SM4250 MIPI_CSI_DSI		REV
DOCUMENT NO.:	Design Name = S88731_1_12_20200730_0844		Custom
DEPARTMENT:		DESIGNER = zhanglejang	
Date:	Page Modify Date = Monday, July 27, 2020	Sheet 5 of 84	

VERSION	EDITED BY	LAST EDIT DATE
1	LAST_EDITOR	2-23-2007_10:06

CONFIDENTIAL AND PROPRIETARY - QUALCOMM TECHNOLOGIES, INC.
NOT TO BE USED, COPIED, REPRODUCED, OR MODIFIED IN WHOLE OR IN PART, NOR ITS CONTENTS REVEALED IN ANY MANNER TO OTHERS WITHOUT THE EXPRESS WRITTEN PERMISSION OF QUALCOMM TECHNOLOGIES, INC.
THIS TECHNICAL DATA MAY BE SUBJECT TO U.S. AND INTERNATIONAL EXPORT, RE-EXPORT, OR TRANSFER ("EXPORT") LAWS. DIVERSION CONTRARY TO U.S. AND INTERNATIONAL LAW IS STRICTLY PROHIBITED.

REVISIONS

LTR	DESCRIPTION	DATE	APPROVED
A	INITIAL RELEASE		

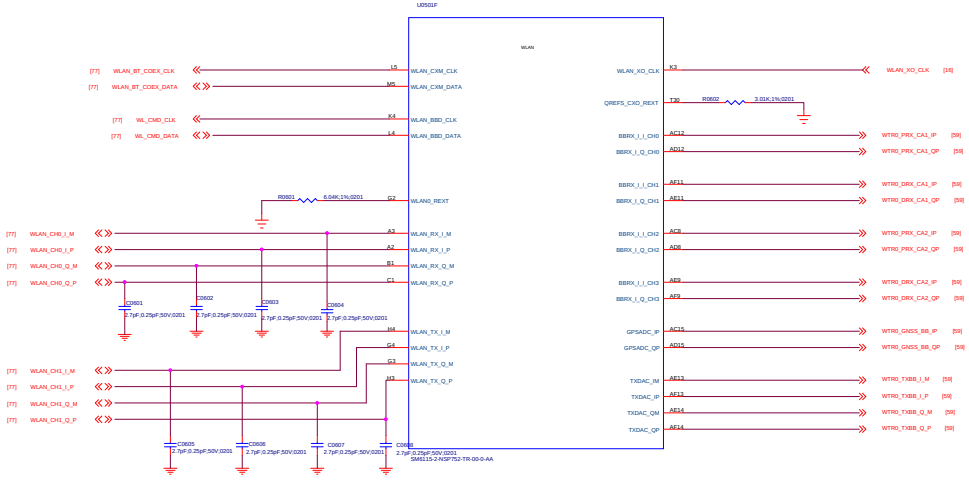

Add C1001-C1008 caps place holder for CLK desense to improve sensitivity.

Title	Page Name = 06_SM4250 WCSS_RF		
DOCUMENT NO.:	Design Name = 580731_1_12_20200730_084		Custom
DEPARTMENT:		DESIGNER = zhanglieqiang	
Date:	Page Modify Date = Monday, July 27, 2020	Sheet 6 of 84	

VERSION	EDITED BY	LAST EDIT DATE
1	LAST_EDITOR	2-23-2007_10:06

CONFIDENTIAL AND PROPRIETARY - QUALCOMM TECHNOLOGIES, INC.
NOT TO BE USED, COPIED, REPRODUCED, OR MODIFIED IN WHOLE OR IN PART, NOR ITS CONTENTS REVEALED IN ANY MANNER TO OTHERS WITHOUT THE EXPRESS WRITTEN PERMISSION OF QUALCOMM TECHNOLOGIES, INC.
THIS TECHNICAL DATA MAY BE SUBJECT TO U.S. AND INTERNATIONAL EXPORT, RE-EXPORT, OR TRANSFER ("EXPORT") LAWS. DIVERSION CONTRARY TO U.S. AND INTERNATIONAL LAW IS STRICTLY PROHIBITED.

REVISIONS

LTR	DESCRIPTION	DATE	APPROVED
A	INITIAL RELEASE		

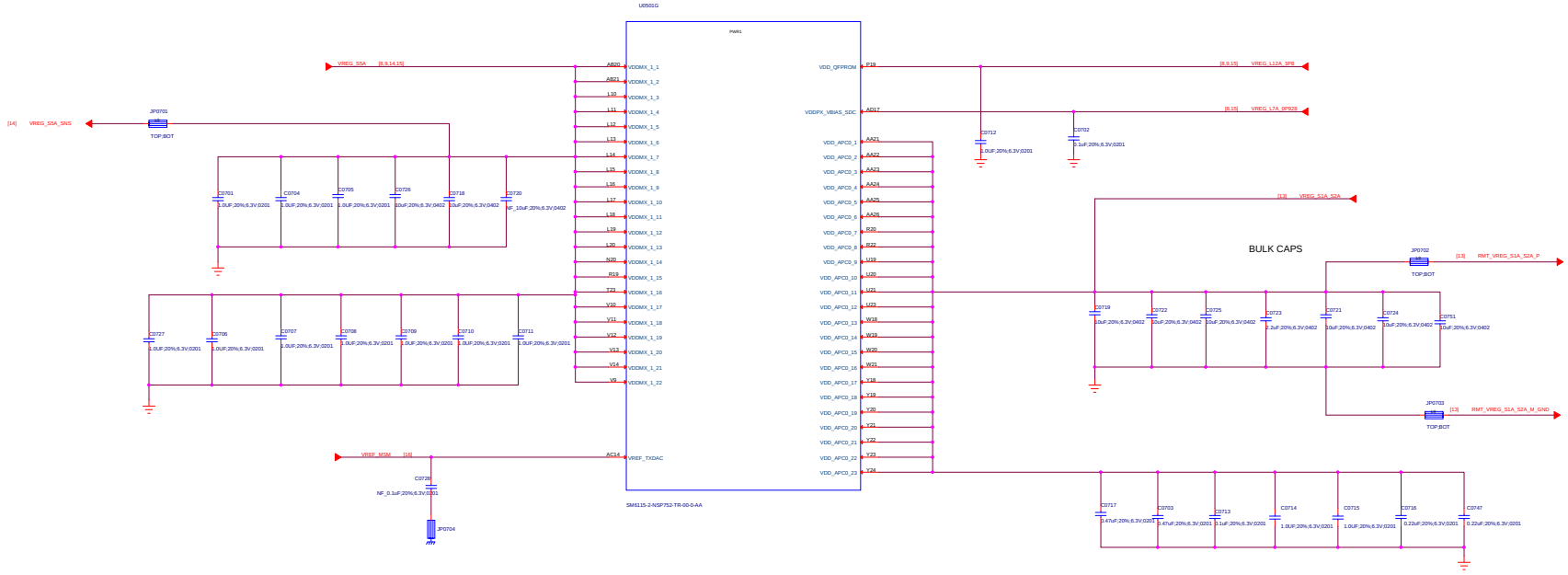

Title	Page Name = 07_SM4250 PWR		
DOCUMENT NO.:	Design Name = 588731_1_12_2020073	Rev	Custom
DEPARTMENT:		DESIGNER = zhanglaojang	
Date:	Page Modify Date = Thursday, July 30, 2020	Sheet 7 of 84	

VERSION	EDITED BY	LAST EDIT DATE
1	LAST_EDITOR	2-23-2007_10:06

CONFIDENTIAL AND PROPRIETARY - QUALCOMM TECHNOLOGIES, INC.
NOT TO BE USED, COPIED, REPRODUCED, OR MODIFIED IN WHOLE OR IN PART, NOR ITS CONTENTS REVEALED IN ANY MANNER TO OTHERS WITHOUT THE EXPRESS WRITTEN PERMISSION OF QUALCOMM TECHNOLOGIES, INC.
THIS TECHNICAL DATA MAY BE SUBJECT TO U.S. AND INTERNATIONAL EXPORT, RE-EXPORT, OR TRANSFER ("EXPORT") LAWS. DIVERSION CONTRARY TO U.S. AND INTERNATIONAL LAW IS STRICTLY PROHIBITED.

REVISIONS

LTR	DESCRIPTION	DATE	APPROVED
A	INITIAL RELEASE		

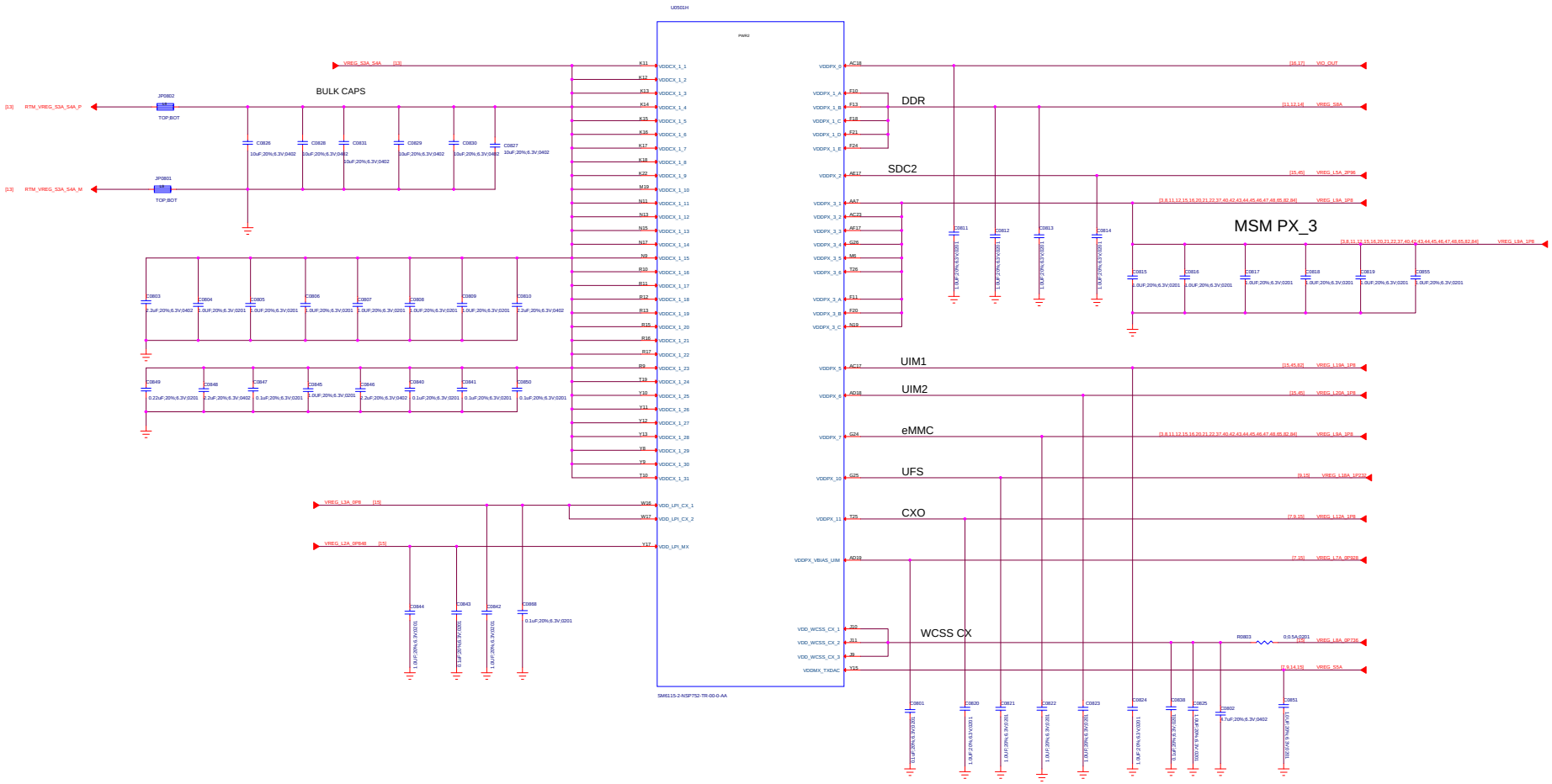

Title	Page Name = 08_SM4250 PWR_2	REV: 210	
DOCUMENT NO.:	Design Name = S86731_1_12_20200723_SM4	Custom	
DEPARTMENT:	DESIGNER = zhangfaejiang		
Date:	Page Modify Date = Thursday, July 30, 2020	Sheet 8 of 84	

VERSION	EDITED BY	LAST EDIT DATE
1	LAST_EDITOR	2-23-2007_10:06

CONFIDENTIAL AND PROPRIETARY - QUALCOMM TECHNOLOGIES, INC.
NOT TO BE USED, COPIED, REPRODUCED, OR MODIFIED IN WHOLE OR IN PART, NOR ITS CONTENTS REVEALED IN ANY MANNER TO OTHERS WITHOUT THE EXPRESS WRITTEN PERMISSION OF QUALCOMM TECHNOLOGIES, INC.
THIS TECHNICAL DATA MAY BE SUBJECT TO U.S. AND INTERNATIONAL EXPORT, RE-EXPORT, OR TRANSFER ("EXPORT") LAWS. DIVERSION CONTRARY TO U.S. AND

REVISIONS

LTR	DESCRIPTION	DATE	APPROVED
A	INITIAL RELEASE		

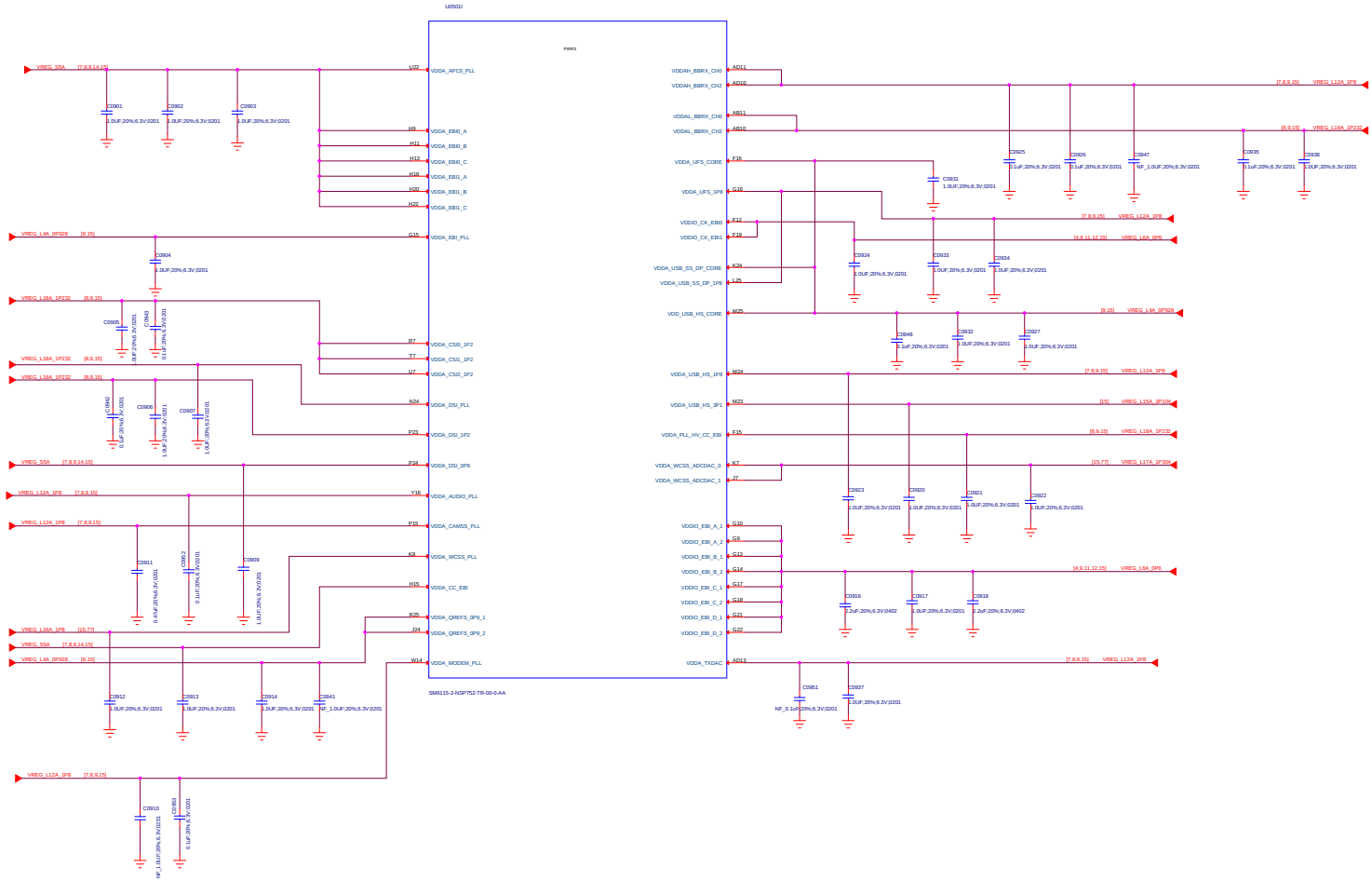

Title	Page Name = 09_SM4250 PWR_3		210
DOCUMENT NO.:	Design Name = 588731_1_12_20200730_2344		Custom
DEPARTMENT:		DESIGNER = zhanglieqiang	
Date:	Page Modify Date = Monday, July 27, 2020	Sheet 9 of 84	

VERSION	EDITED BY	LAST EDIT DATE
1	LAST_EDITOR	2-23-2007_10:06

CONFIDENTIAL AND PROPRIETARY - QUALCOMM TECHNOLOGIES, INC.
NOT TO BE USED, COPIED, REPRODUCED, OR MODIFIED IN WHOLE OR IN PART, NOR ITS CONTENTS REVEALED IN ANY MANNER TO OTHERS WITHOUT THE EXPRESS WRITTEN PERMISSION OF QUALCOMM TECHNOLOGIES, INC.
THIS TECHNICAL DATA MAY BE SUBJECT TO U.S. AND INTERNATIONAL EXPORT, RE-EXPORT, OR TRANSFER ("EXPORT") LAWS. DIVERSION CONTRARY TO U.S. AND INTERNATIONAL LAW IS STRICTLY PROHIBITED.

REVISIONS

LTR	DESCRIPTION	DATE	APPROVED
A	INITIAL RELEASE		

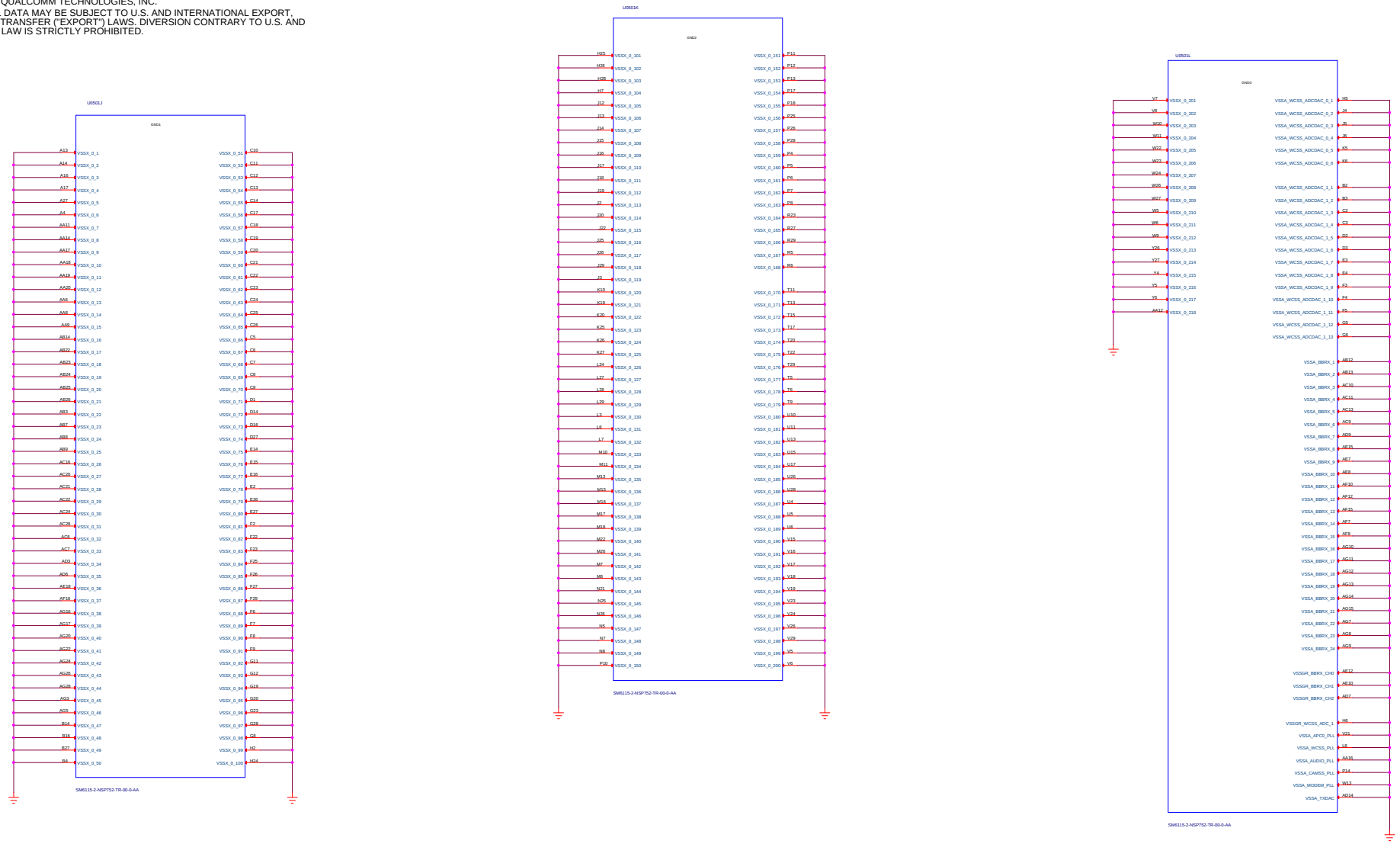

SM6125 GND

Title	Page Name = 10_SM4250 GND
DOCUMENT NO.:	Design Name = 588731_1_12_20200730_084
DEPARTMENT:	DESIGNER = zhanglieqiang
Date:	Page Modify Date = Monday, July 27, 2020

REV: V3D
Custom
Sheet 30 of 84

VERSION	EDITED BY	LAST EDIT DATE
1	LAST_EDITOR	2-23-2007_10:06

eMCP and UFS compatible design

CONFIDENTIAL AND PROPRIETARY - QUALCOMM TECHNOLOGIES, INC.
NOT TO BE USED, COPIED, REPRODUCED, OR MODIFIED IN WHOLE OR IN PART, NOR ITS CONTENTS REVEALED IN ANY MANNER TO OTHERS WITHOUT THE EXPRESS WRITTEN PERMISSION OF QUALCOMM TECHNOLOGIES, INC.
THIS TECHNICAL DATA MAY BE SUBJECT TO U.S. AND INTERNATIONAL EXPORT, RE-EXPORT, OR TRANSFER ("EXPORT") LAWS. DIVERSION CONTRARY TO U.S. AND INTERNATIONAL LAW IS STRICTLY PROHIBITED.

REVISIONS

LTR	DESCRIPTION	DATE	APPROVED
A	INITIAL RELEASE		

Pls near to the memory

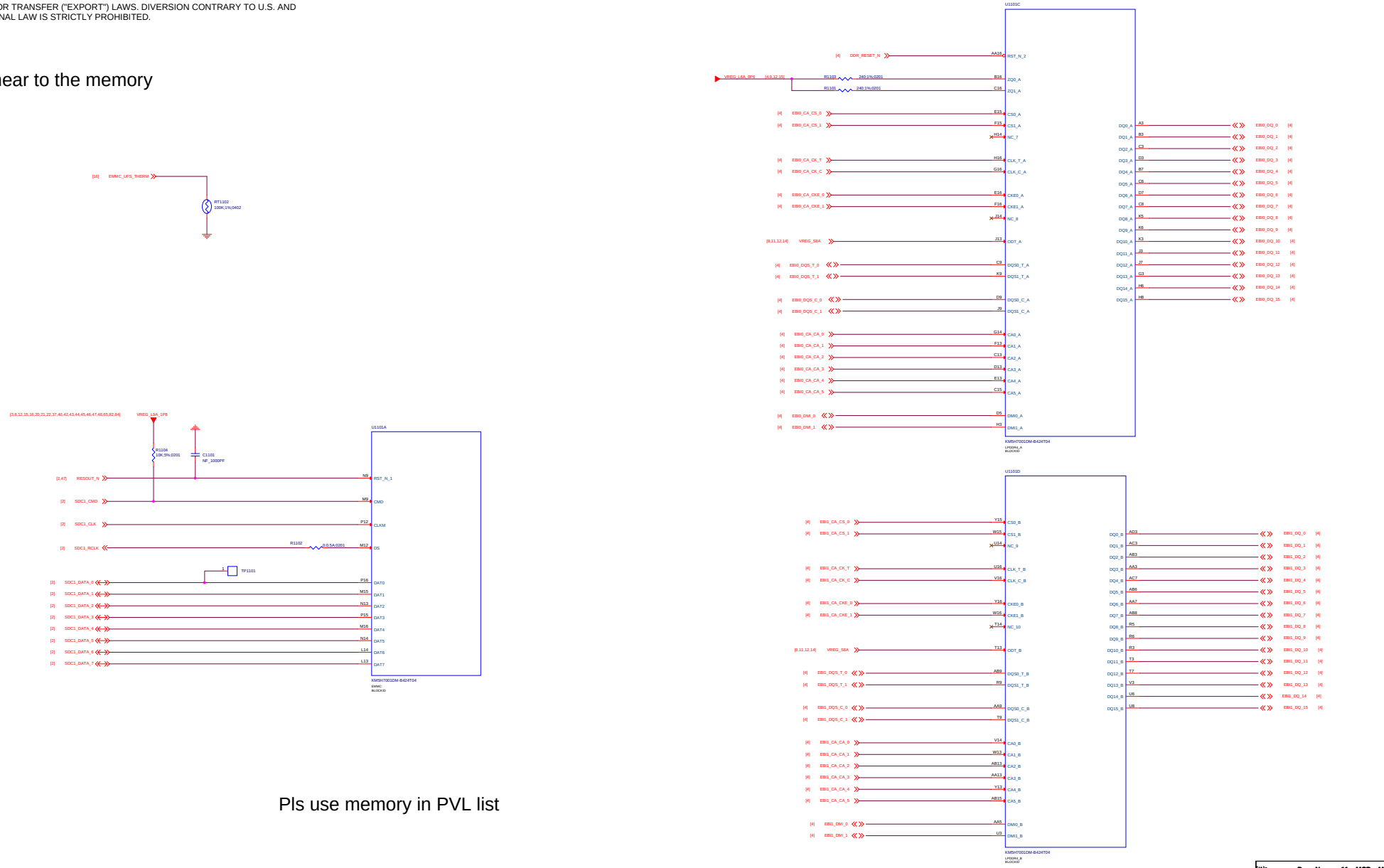

Pls use memory in PVL list

VERSION	EDITED BY	LAST EDIT DATE
1	LAST_EDITOR	2-23-2007_10:06

CONFIDENTIAL AND PROPRIETARY - QUALCOMM TECHNOLOGIES, INC.
NOT TO BE USED, COPIED, REPRODUCED, OR MODIFIED IN WHOLE OR IN PART, NOR ITS CONTENTS REVEALED IN ANY MANNER TO OTHERS WITHOUT THE EXPRESS WRITTEN PERMISSION OF QUALCOMM TECHNOLOGIES, INC.
THIS TECHNICAL DATA MAY BE SUBJECT TO U.S. AND INTERNATIONAL EXPORT, RE-EXPORT, OR TRANSFER ("EXPORT") LAWS. DIVERSION CONTRARY TO U.S. AND INTERNATIONAL LAW IS STRICTLY PROHIBITED.

REVISIONS

LTR	DESCRIPTION	DATE	APPROVED
A	INITIAL RELEASE		

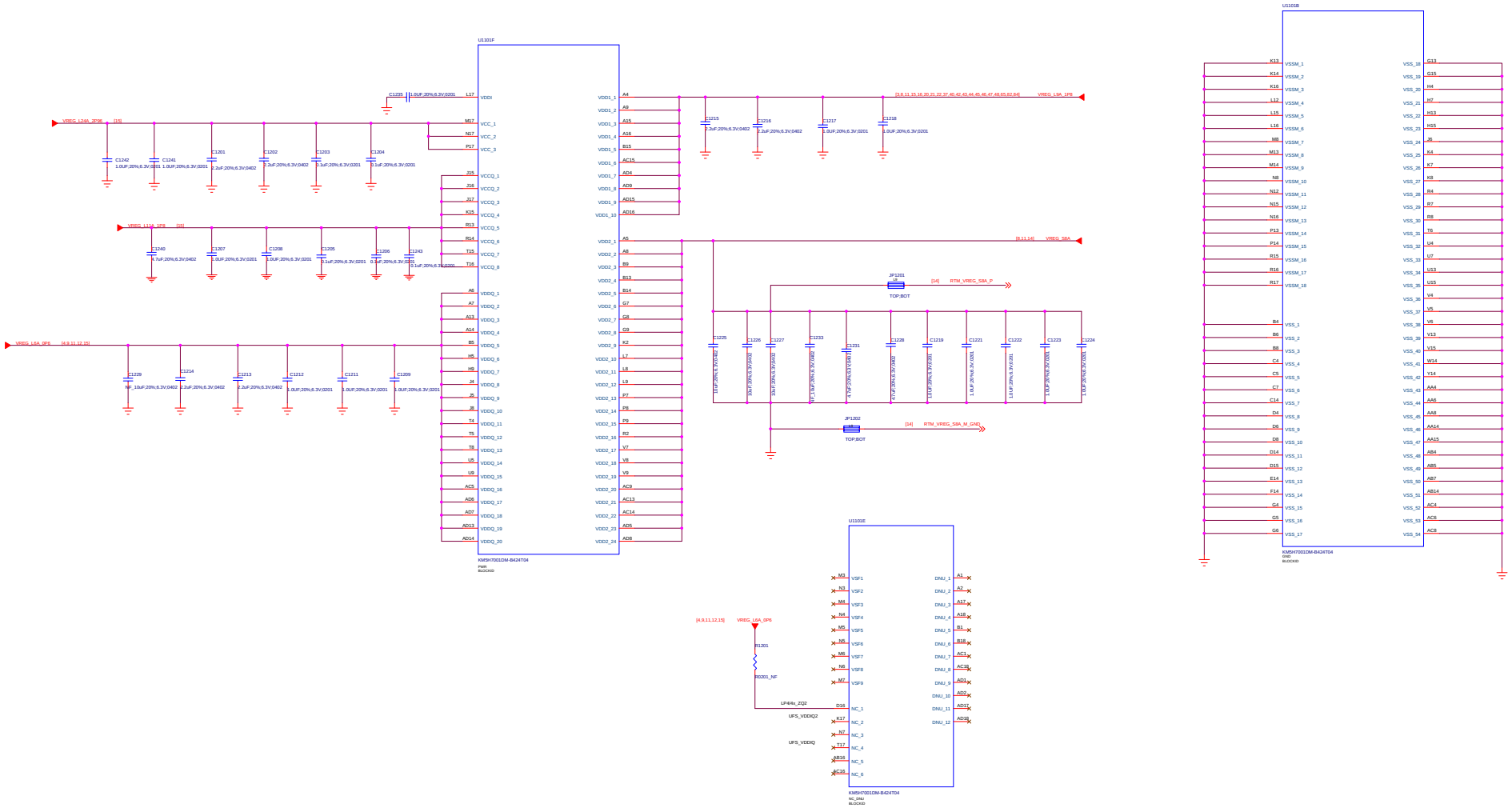

eMCP_POWER

Title	Page Name = 12_EMCP_POWER	REV
DOCUMENT NO.:	Design Name = 588731_1_12_20200730_1844	Custom
DEPARTMENT:	DESIGNER = zhangliejiang	
Date:	Page Modify Date = Monday, July 27, 2020	Sheet 12 of 84

VERSION	EDITED BY	LAST EDIT DATE
1	LAST_EDITOR	2-23-2007_10:06

CONFIDENTIAL AND PROPRIETARY - QUALCOMM TECHNOLOGIES, INC.
NOT TO BE USED, COPIED, REPRODUCED, OR MODIFIED IN WHOLE OR IN PART, NOR ITS CONTENTS REVEALED IN ANY MANNER TO OTHERS WITHOUT THE EXPRESS WRITTEN PERMISSION OF QUALCOMM TECHNOLOGIES, INC.
THIS TECHNICAL DATA MAY BE SUBJECT TO U.S. AND INTERNATIONAL EXPORT, RE-EXPORT, OR TRANSFER ("EXPORT") LAWS. DIVERSION CONTRARY TO U.S. AND INTERNATIONAL LAW IS STRICTLY PROHIBITED.

REVISIONS

LTR	DESCRIPTION	DATE	APPROVED
A	INITIAL RELEASE		

Shares input cap with VDD_S5

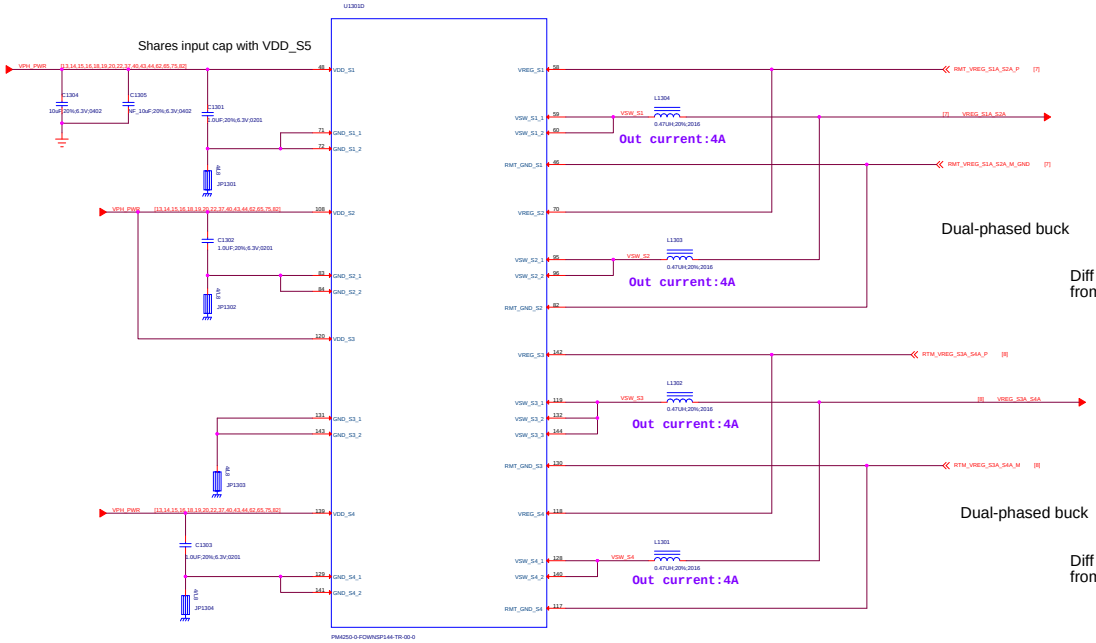

Dual-phased buck

Diff Pair back to PMIC from load cap

Dual-phased buck

Diff Pair back to PMIC from load cap

VREG_S1A is REMOTE diff sense,
VREG_Sx & RMT_GND_Sx should be routed as a differential pair
Do not route VREG_Sx & RMT_GND_Sx near VIN_Sx
Do not route VREG_Sx & RMT_GND_Sx near VSW_Sx unless separated by ground shield

VREG_S2A is REMOTE diff sense,

VREG_Sx & RMT_GND_Sx should be routed as a differential pair
Do not route VREG_Sx & RMT_GND_Sx near VIN_Sx
Do not route VREG_Sx & RMT_GND_Sx near VSW_Sx unless separated by ground shield

VREG_S3A is REMOTE diff sense,
VREG_Sx & RMT_GND_Sx should be routed as a differential pair
Do not route VREG_Sx & RMT_GND_Sx near VIN_Sx
Do not route VREG_Sx & RMT_GND_Sx near VSW_Sx unless separated by ground shield

VREG_S4A is REMOTE diff sense,
VREG_Sx & RMT_GND_Sx should be routed as a differential pair
Do not route VREG_Sx & RMT_GND_Sx near VIN_Sx
Do not route VREG_Sx & RMT_GND_Sx near VSW_Sx unless separated by ground shield

Place Cin as close to PMIC as possible to achieve this requirement.

Loop inductance from (VIN_Sx to Cin + Cin to GND_Sx) must be < 3nH

S1A-2A:	FTS510	0.8V default	8000mA Ipeak 8110.00mA	APC
S3A-4A:	FTS510	0.8V default	8000mA Ipeak 8480mA	CX, MODEM
S5A:	HFS510	0.912V default	4000mA Ipeak 3620.00mA	EBI, MX, nLDO
S6A:	HFS510	1.352V default	2000mA Ipeak 1560mA	LDO
S7A:	HFS510	2.04V default	2500mA Ipeak 2350mA	LDO
S8A:	FTS510	1.128V default	4000mA Ipeak 1790mA	LDO, LPDDR4x

PM6125_Bucks_S1-S4

Title: Page Name = 13_PM4250_Bucks_S1-S4
DOCUMENT NO.: Design Name = S80731_1_12_20200730_Sub
Size: Custom
DEPARTMENT:
DESIGNER: DESIGNER = zhangliejiang
Date: Page Modify Date = Monday, July 27, 2020
Sheet 13 of 84

VERSION	EDITED BY	LAST EDIT DATE
1	LAST_EDITOR	2-23-2007_10:06

CONFIDENTIAL AND PROPRIETARY - QUALCOMM TECHNOLOGIES, INC.
NOT TO BE USED, COPIED, REPRODUCED, OR MODIFIED IN WHOLE OR IN PART, NOR ITS CONTENTS REVEALED IN ANY MANNER TO OTHERS WITHOUT THE EXPRESS WRITTEN PERMISSION OF QUALCOMM TECHNOLOGIES, INC.
THIS TECHNICAL DATA MAY BE SUBJECT TO U.S. AND INTERNATIONAL EXPORT, RE-EXPORT, OR TRANSFER ("EXPORT") LAWS. DIVERSION CONTRARY TO U.S. AND INTERNATIONAL LAW IS STRICTLY PROHIBITED.

REVISIONS

LTR	DESCRIPTION	DATE	APPROVED
A	INITIAL RELEASE		

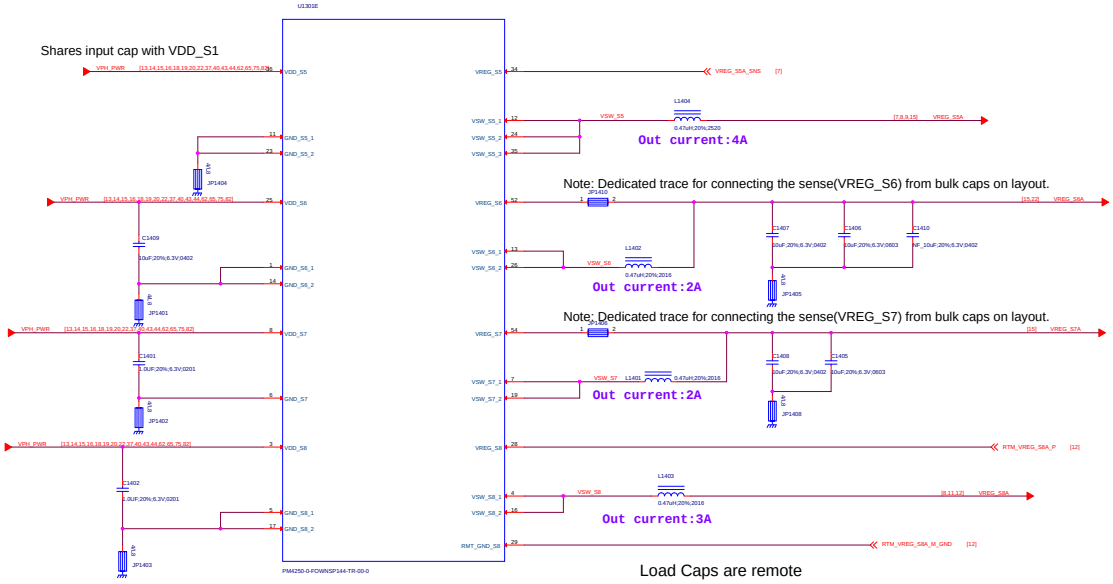

Load Caps are remote

Place Cin as close to PMIC as possible to achieve this requirement.

Loop inductance from (VIN_Sx to Cin + Cin to GND_Sx) must be < 3nH

Route diff pair out from Cap back to appropriate pins at PMIC

VREG_S8A is LOCAL diff sense,
VREG_Sx & RMT_GND_Sx should be routed as a differential pair
Do not route VREG_Sx & RMT_GND_Sx near VIN_Sx
Do not route VREG_Sx & RMT_GND_Sx near VSW_Sx unless separated by ground shield

PM6125_Bucks_S5-S8

Title	Page Name = 14_PM4250_Bucks_S5-S8
DOCUMENT NO.:	Design Name = 588731_1_12_20200735 Rev Custom
DEPARTMENT:	DESIGNER = zhanglanglang
Date:	Page Modify Date = Monday, July 27, 2020 Sheet 14 of 84

VERSION	EDITED BY	LAST EDIT DATE
1	LAST_EDITOR	2-23-2007_10:06

CONFIDENTIAL AND PROPRIETARY - QUALCOMM TECHNOLOGIES, INC.
NOT TO BE USED, COPIED, REPRODUCED, OR MODIFIED IN WHOLE OR IN PART, NOR ITS CONTENTS REVEALED IN ANY MANNER TO OTHERS WITHOUT THE EXPRESS WRITTEN PERMISSION OF QUALCOMM TECHNOLOGIES, INC.
THIS TECHNICAL DATA MAY BE SUBJECT TO U.S. AND INTERNATIONAL EXPORT, RE-EXPORT, OR TRANSFER ("EXPORT") LAWS. DIVERSION CONTRARY TO U.S. AND INTERNATIONAL LAW IS STRICTLY PROHIBITED.

REVISIONS			
LTR	DESCRIPTION	DATE	APPROVED
AT	INITIAL RELEASE		

LDO Input Rail	Parent Buck	Max Current
VDD_L1_L7_L17_L18	VREG_S6	1.13
VDD_L2_L3_L4	VREG_S8	0.816
VDD_L5_L15_L19_L20_L21_L22	Ext Boost Byp	1.38
VDD_L6_L8	VREG_S5	0.906
VDD_L9_L11	VREG_S7	1.01
VDD_L10_L13_L14	VREG_S7	1.08
VDD_L12_L16	VREG_S7	0.270
VDD_L23_L24	Ext Boost Byp	1.161

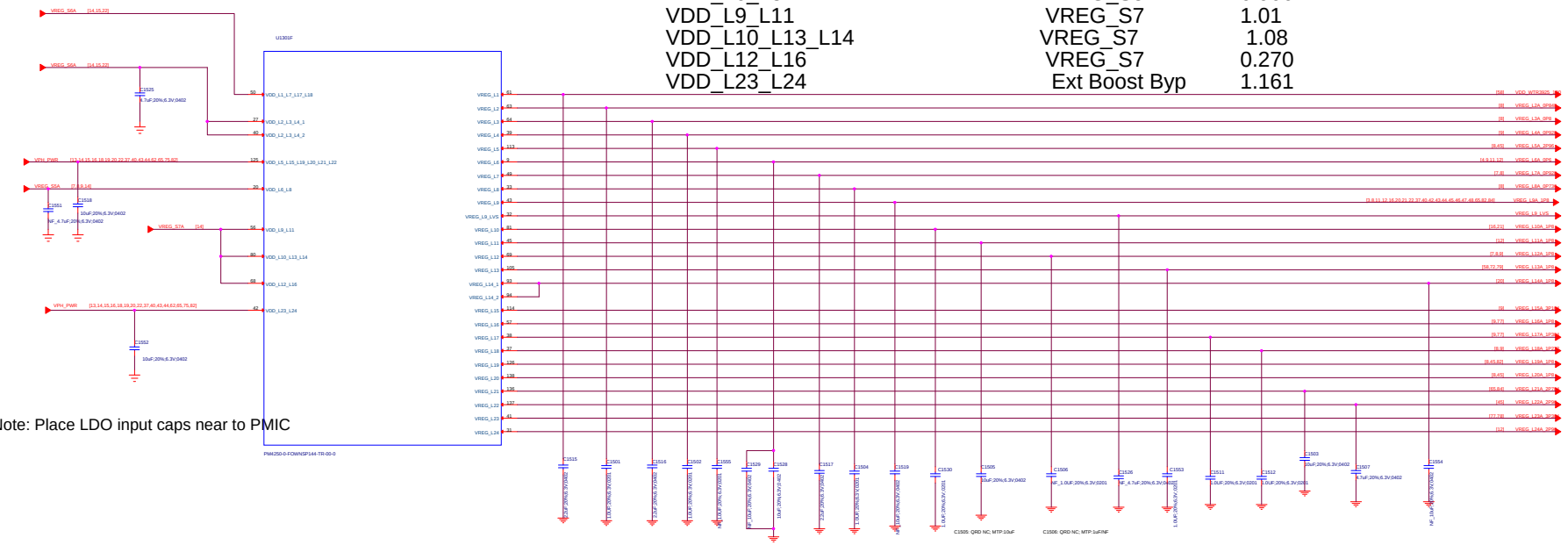

Note: Place LDO input caps near to PMIC

1.0uF

2.2uF

LDO Type	Source	V_default (est)	Target Pin#
L1 N600	S6A	1.2V (625) QLN,SDR 1,2	61
L2 N300	S8A	1V (320) SDR VDD 1.0V	63
L3 N600	S8A	1V (370) SDR VDD 1.0V	64
L4 N300	S8A	0.928V (126) QLINK, EBI, MIPI	39
L5 MVP50	VPH	2.96V (22) PX	113
L6 N1200	S5A	0.624V (1040) VDDQ, EBI	9
L7 N600	S6A	0.928V (54.2) USB	49
L8 N300	S5A	0.664V (81) CX	33
L9 LVP600	S7A	1.8V (754) Sensors, WCD, TMD, PMI_MSM, QET	43
L10 LVP150	S7A	1.8V (100) QFPROM, USB,UFS, PX	81
L11 LVP600	S7A	1.8V (925) EMMC/VCCQ	45
L12 LVP300	S7A	1.8V (121) OV. USB_REDRIVER	69
L13 LVP300	S7A	1.8V (204) QPM 1.8V, BBRX, GPS	105
L14 LVP600	S7A	1.8V (650) WCD Buck	94,93
L15 MVP150	VPH	3.128V (5.28) USB 3.1V, DP PHY	114
L16 LVP150	S7A	1.8V (92.5) WCSS, WCN_XO	93
L17 N300	S6A	1.304V (246) WCN, WCSS ADX DAC	38
L18 N300	S6A	1.232V (133) MIPI, VDDPX	37
L19 MVP150	VPH/BB	1.8V (60.2) Memory, SN100, PX	126
L20 MVP150	VPH/BB	1.8V (60.2) Memory, SN100, PX	138
L21 MVP600	VPH/BB	2.704V (0.68) QAT, DFE, RTC,QSW	136
L22 MVP600	VPH/BB	2.96V (800) MMC	137
L23 MVP600	VPH/BB	3.304V (591) WCN 3.3V	41
L24 MVP600	VPH/BB	2.96V (1170) EMMC	31

PM6125_LDOs

LDO L5/L9/L10/L11/L12/L13/L14/L15/L16/L19/L20/L21/L22/L23/L24 is the Pseudo-capless LDO, so can dni CAP in BOM

PSEUDO CAPLESS LDOs
P-type are psuedo-capless, cap can be at load
For CAPLESS LDOs: If decaps on the load side do not add up to LDO spec, then install the cap close to the PMIC

Title	Page Name = 15_PM4250_LDOS		V10
DOCUMENT NO.:	Design Name = 588731_1_12_20260723	SIZE	Custom
DEPARTMENT:		DESIGNER = zhangfeijang	
Date:	Page Modify Date = Monday, July 27, 2026	Sheet	15 of 84

VERSION	EDITED BY	LAST EDIT DATE
1	LAST_EDITOR	2-23-2007_10:06

CONFIDENTIAL AND PROPRIETARY - QUALCOMM TECHNOLOGIES, INC.
NOT TO BE USED, COPIED, REPRODUCED, OR MODIFIED IN WHOLE OR IN PART, NOR ITS CONTENTS REVEALED IN ANY MANNER TO OTHERS WITHOUT THE EXPRESS WRITTEN PERMISSION OF QUALCOMM TECHNOLOGIES, INC.
THIS TECHNICAL DATA MAY BE SUBJECT TO U.S. AND INTERNATIONAL EXPORT, RE-EXPORT, OR TRANSFER ("EXPORT") LAWS. DIVERSION CONTRARY TO U.S. AND INTERNATIONAL LAW IS STRICTLY PROHIBITED.

REVISIONS

LTR	DESCRIPTION	DATE	APPROVED
A	INITIAL RELEASE		

Layout Note:
No trace shall be present in at-least two immediate layers below XTAL.

Route XTAL IN/OUT trace with length between 3mm and 10mm

AVDD_BYP should be routed away from noisy traces

Trace from pin to cap and ONE dedicated via from cap to main ground plane.
DCR < 200mOhm and ESL < 10nH
Do NOT connect to any other ground.

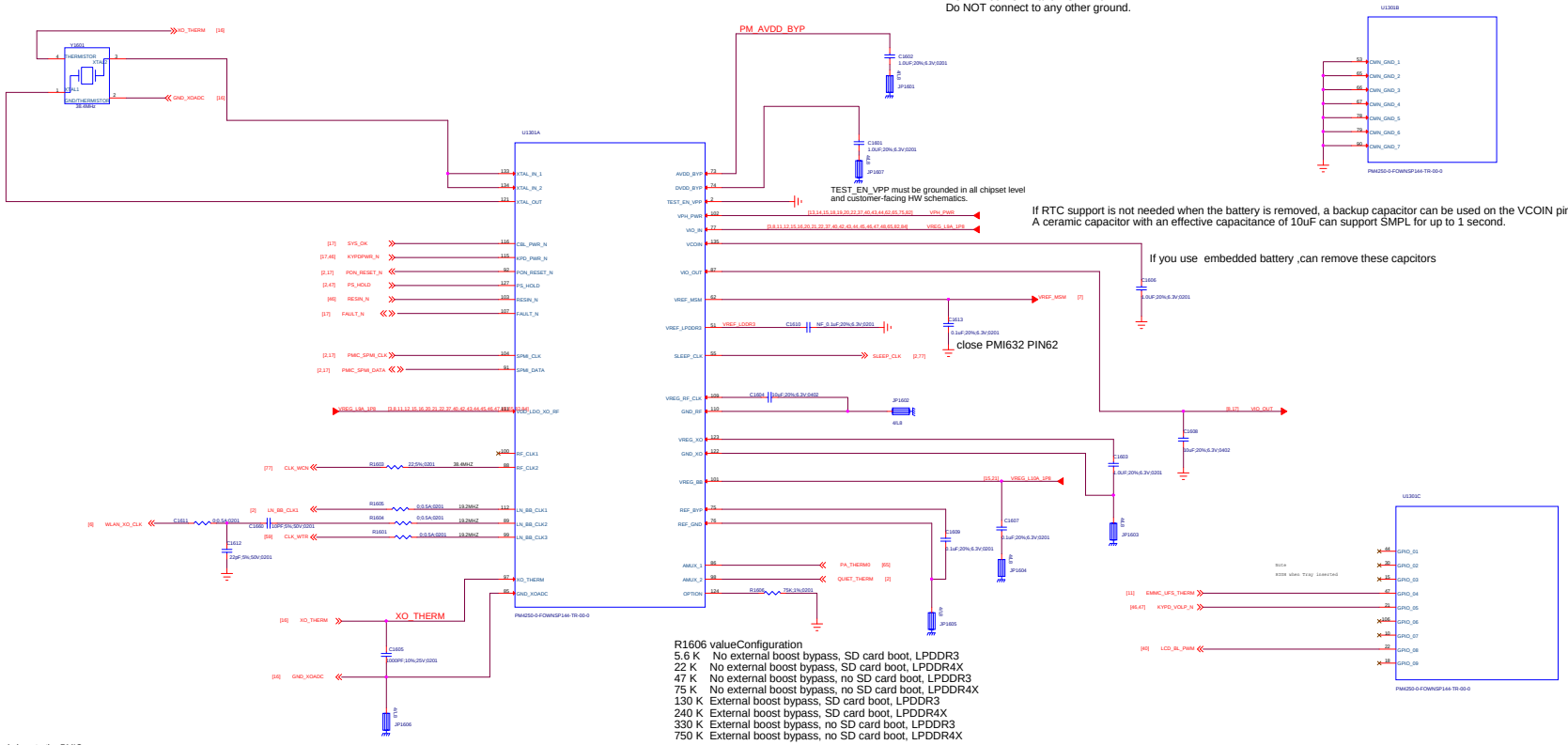

R1606 valueConfiguration
5.6 K No external boost bypass, SD card boot, LPDDR3
22 K No external boost bypass, SD card boot, LPDDR4X
47 K No external boost bypass, no SD card boot, LPDDR3
75 K No external boost bypass, no SD card boot, LPDDR4X
130 K External boost bypass, SD card boot, LPDDR3
240 K External boost bypass, SD card boot, LPDDR4X
330 K External boost bypass, no SD card boot, LPDDR3
750 K External boost bypass, no SD card boot, LPDDR4X

Placement/Layout Note:
VREG_RF Cout should be placed close to the PMIC
Can be prioritized over VREG_XO Cout placement

Short dedicated route to VREG_RF/XO cap
Dedicated via directly to main ground plane at the capacitor

Dedicated trace from REF_BYP to cap.
Dedicated trace from REF_GND to cap.
Dedicated via to main ground plane right under PMIC pin (REF_GND) or as close to the pin as possible.
DO NOT add via at cap.
REF_BYP and REF_GND should be routed away from noisy traces

SPMI_CLK & SPMI_DATA should be routed away from noisy traces
Route signals as a diff pair as much as possible

GND_XOADC
Skinny trace to XTAL components ground.
One dedicated via to main ground place as close to PMIC pin as possible

Critical Layout Guidelines for Clocks (go/PmicLayoutChecklist)
Coupling to any RFCLK or LNBBCLK output from each aggressor should be < 50 fF.
1. SMPS components (Buck, Boost, Charger)
2. VSW_Sx traces (Buck, Boost, Charger)
3. All other RFCLK, LNBBCLK
4. Any high speed digital signal
5. Any other noisy signals

Critical Layout Guidelines for VREF_RF (go/PmicLayoutChecklist)

Preferred: Short, dedicated route to VREG_RF cap,
away from noisy signals and dedicated via to main ground plane at cap or PMIC pin.

Acceptable: Dedicated via directly to main ground plane at the GND_CLKSXO pin
and at VREG_RF cap (without routing to cap).

Do NOT connect to any other ground.

Loop DCR must be <1000 m?.
Loop inductance must be <3 nH.

PM6125_HK/IO

Title	Page Name = 16_PM4250_HK/IO	REV
DOCUMENT NO.:	Design Name = 589731_1_12_20200730_0854 Custom	
DEPARTMENT:	DESIGNER = zhangliejing	
Date:	Page Modify Date = Monday, July 27, 2020	Sheet 16 of 84

VERSION	EDITED BY	LAST EDIT DATE
1	LAST_EDITOR	2-23-2007_10:06

CONFIDENTIAL AND PROPRIETARY - QUALCOMM TECHNOLOGIES, INC.
NOT TO BE USED, COPIED, REPRODUCED, OR MODIFIED IN WHOLE OR IN PART, NOR ITS CONTENTS REVEALED IN ANY MANNER TO OTHERS WITHOUT THE EXPRESS WRITTEN PERMISSION OF QUALCOMM TECHNOLOGIES, INC.
THIS TECHNICAL DATA MAY BE SUBJECT TO U.S. AND INTERNATIONAL EXPORT, RE-EXPORT, OR TRANSFER ("EXPORT") LAWS. DIVERSION CONTRARY TO U.S. AND INTERNATIONAL LAW IS STRICTLY PROHIBITED.

REVISIONS

LTR	DESCRIPTION	DATE	APPROVED
A	INITIAL RELEASE		

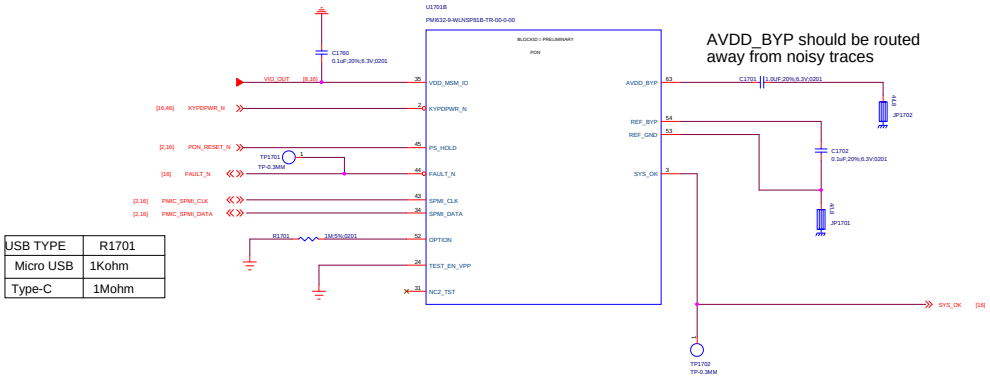

AVDD_BYP should be routed away from noisy traces

Trace from pin to cap and ONE dedicated via from cap to main ground plane.
DCR < 200mOhm and ESL < 10nH
Do NOT connect to any other ground.

REF_BYP and REF_GND should be routed away from noisy traces

Dedicated trace from REF_BYP to cap.
Dedicated trace from REF_GND to cap.
Dedicated via to main ground plane right under PMIC pin (REF_GND) or as close to the pin as possible.
Do NOT add via at cap.

USB TYPE	R1701
Micro USB	1Kohm
Type-C	1Mohm

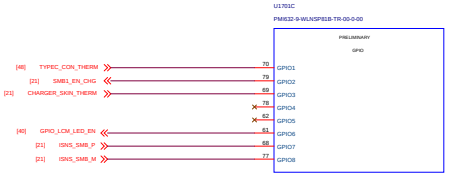

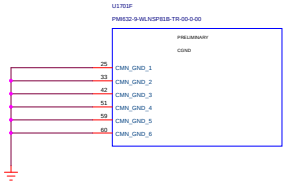

GPIO#	GPIO Function
GPIO1 (LV)	FMB1 (Output mode) / TypeC_CONN_THERM_SNS / MSM/eMMC THERM
GPIO2 (MV)	SMB_EN / HRLED / (SINK required ?Fixed 10mA)
GPIO3_AMUX	Skin_Therm_Sns / FLASH_THERM_SNS
GPIO4 (LV)	I2C_IRQ (Output) / TypeC_CONN_THERM_SNS / FMB2 (Output)
GPIO5_AMUX (MV)	SMB_THERM_SNS / Flash_Strobe / USB_ID
GPIO6 (LV)	WLED_EN
GPIO7_AMUX (LV)	SMB_VCHG_P
GPIO8_AMUX (LV)	FMB2 (Output) / SMB_VHG_M

PMI632_Control

Title	Page Name = 17_PMI632_CONTROL
DOCUMENT NO.:	Design Name = 588731_1_12_20200735_584 Custom
DEPARTMENT:	DESIGNER = zhanglanjiang
Date:	Page Modify Date = Monday, July 27, 2020 Sheet 17 of 84

VERSION	EDITED BY	LAST EDIT DATE
1	LAST_EDITOR	2-23-2007_10:06

CONFIDENTIAL AND PROPRIETARY - QUALCOMM TECHNOLOGIES, INC.
NOT TO BE USED, COPIED, REPRODUCED, OR MODIFIED IN WHOLE OR IN PART, NOR ITS CONTENTS REVEALED IN ANY MANNER TO OTHERS WITHOUT THE EXPRESS WRITTEN PERMISSION OF QUALCOMM TECHNOLOGIES, INC.
THIS TECHNICAL DATA MAY BE SUBJECT TO U.S. AND INTERNATIONAL EXPORT, RE-EXPORT, OR TRANSFER ("EXPORT") LAWS. DIVERSION CONTRARY TO U.S. AND INTERNATIONAL LAW IS STRICTLY PROHIBITED.

REVISIONS

LTR	DESCRIPTION	DATE	APPROVED
A	INITIAL RELEASE		

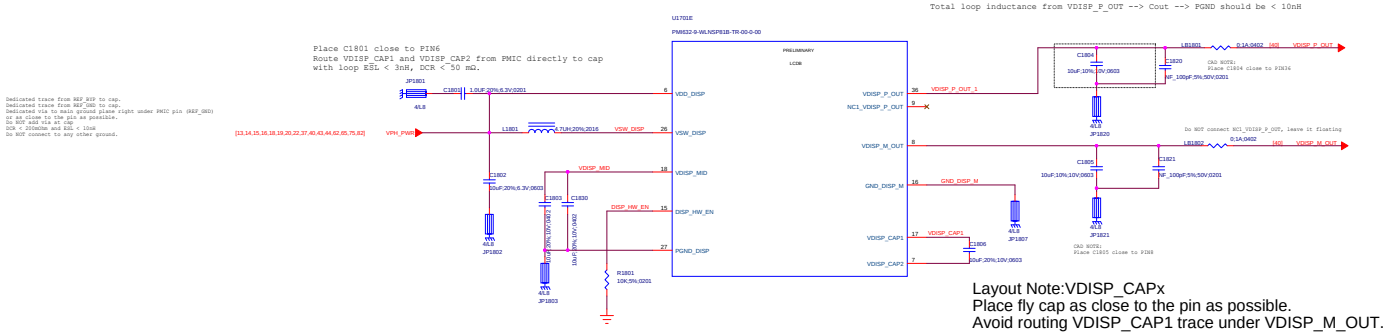

Layout Note:VDISP_CAPx
Place fly cap as close to the pin as possible.
Avoid routing VDISP_CAP1 trace under VDISP_M_OUT.

Layout Note:DISP_HW_EN
This signal is used for "Display Tap to Wake"
If unused in HW, this pin should be connected to GND

NOTE:
C2404 can use the 25V capacitor too,
just for the BOM category normalized

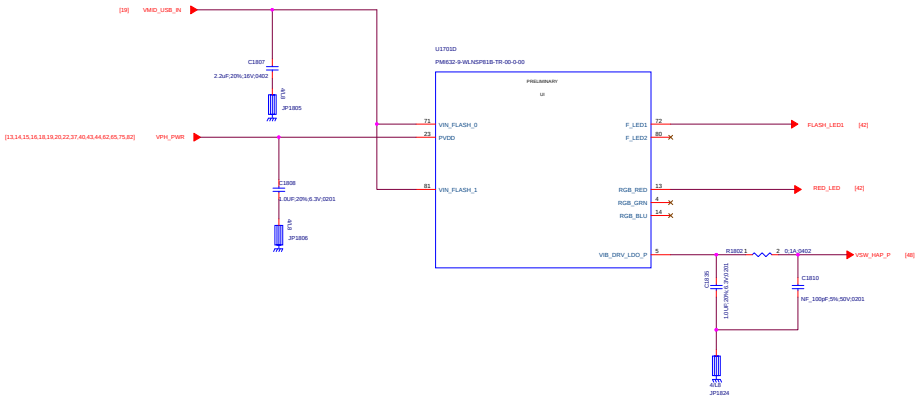

PMI632_LCD/VIB/RGB/Flash

Title	Page Name = 18_PMI632_LCD/VIB/RGB/Flash
DOCUMENT NO.:	Design Name = 586731_1_12_20200723_084 Custom
DEPARTMENT:	DESIGNER = zhangliejiang
Date:	Page Modify Date = Monday, July 27, 2020 Sheet 18 of 84

VERSION	EDITED BY	LAST EDIT DATE
1	LAST_EDITOR	2-23-2007_10:06

CONFIDENTIAL AND PROPRIETARY - QUALCOMM TECHNOLOGIES, INC.
NOT TO BE USED, COPIED, REPRODUCED, OR MODIFIED IN WHOLE OR IN PART, NOR

PERMISSION OF QUALCOMM TECHNOLOGIES, INC.
THIS TECHNICAL DATA MAY BE SUBJECT TO U.S. AND INTERNATIONAL EXPORT, RE-EXPORT, OR TRANSFER ("EXPORT") LAWS. DIVERSION CONTRARY TO U.S. AND INTERNATIONAL LAW IS STRICTLY PROHIBITED.

REVISIONS			
LTR	DESCRIPTION	DATE	APPROVED
A	INITIAL RELEASE		

NOTE:
Use C1902= 2.2uF for paraller Charging Config
Use C1902= 4.7uF for only PMI Charging Config

NOTE:
C1902 can use the 25V capacitor too,
just for the BOM category normalized

NOTE:
recommand to use battery NTC values 100K, B=4250
Layout Note: ITS CONTENTS REVEALED IN ANY MANNER TO OTHERS WITHOUT THE EXPRESS WRITTEN
PACK_SNS_M should have a dedicated route
to battery connector negative sense

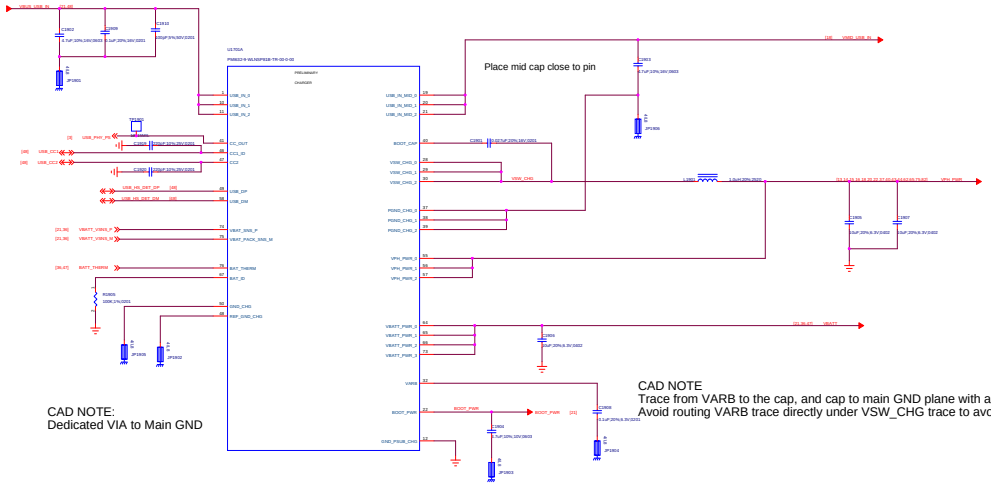

NOTE:
BOOT_PWR net is 5VDC,cap is 0603. Do not use 0402 as may derate to -80%.

Note: place NTC1901 close to Hot spot between PMI632 and SMB1355

PMI632_Charger/PD PHY

Title:	Page Name = 19_PMI632_Charger/PD PHY
DOCUMENT NO.:	Design Name = 80-P31_1_13_20080[redacted]
DEPARTMENT:	DESIGNER = Zhonghongxing
Date:	Page Modify Date = Monday, July 27, 2[redacted] Sheet 19 of 84

VERSION	EDITED BY	LAST EDIT DATE
1	LAST_EDITOR	2-23-2007_10:06

CONFIDENTIAL AND PROPRIETARY - QUALCOMM TECHNOLOGIES, INC.
NOT TO BE USED, COPIED, REPRODUCED, OR MODIFIED IN WHOLE OR IN PART, NOR ITS CONTENTS REVEALED IN ANY MANNER TO OTHERS WITHOUT THE EXPRESS WRITTEN PERMISSION OF QUALCOMM TECHNOLOGIES, INC.
THIS TECHNICAL DATA MAY BE SUBJECT TO U.S. AND INTERNATIONAL EXPORT, RE-EXPORT, OR TRANSFER ("EXPORT") LAWS. DIVERSION CONTRARY TO U.S. AND INTERNATIONAL LAW IS STRICTLY PROHIBITED.

REVISIONS

LTR	DESCRIPTION	DATE	APPROVED
A	INITIAL RELEASE		

For Headset TDD debug

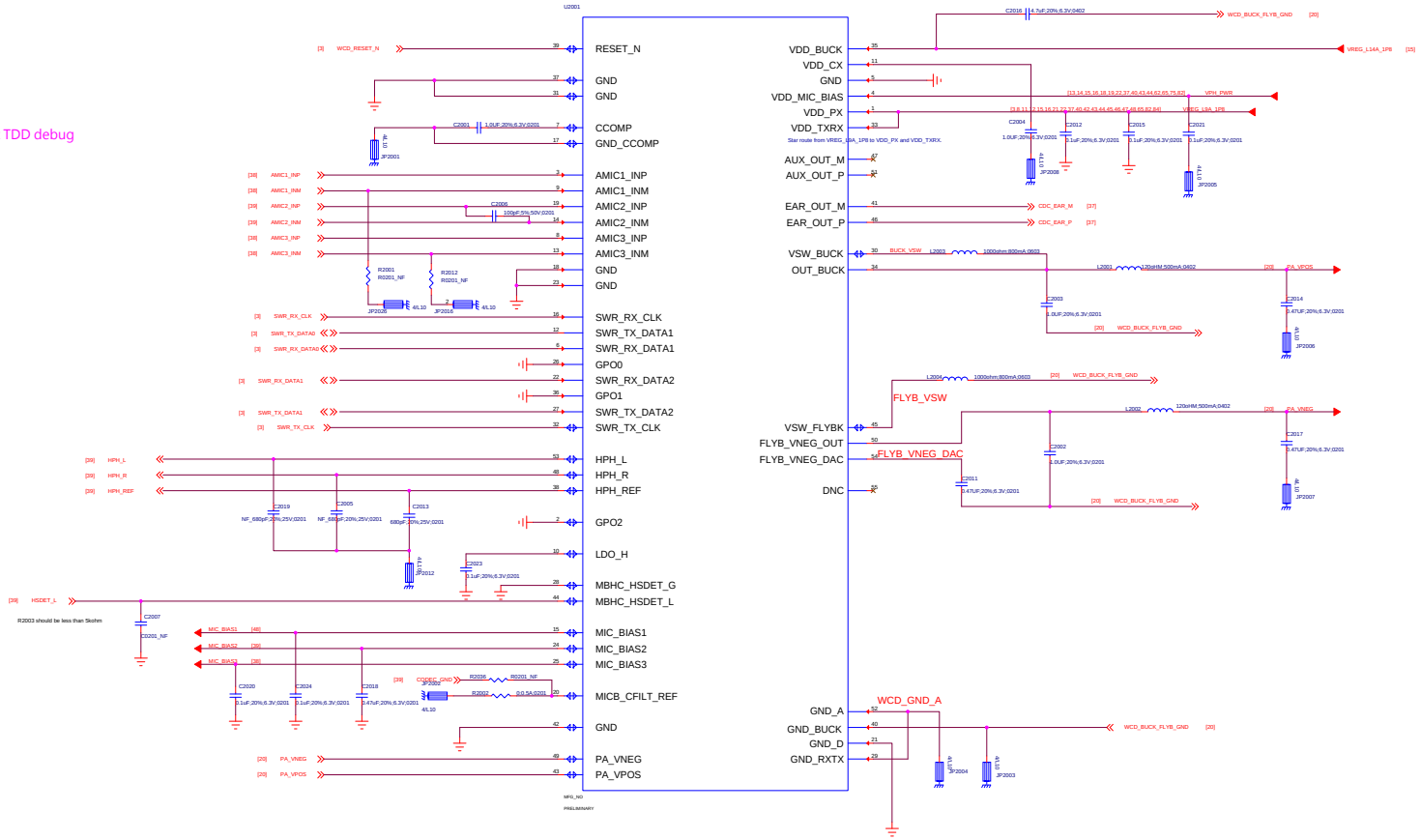

NOTE:L2001-L2004 Can't change to other PN.Otherwise will cause receiver TDD issue.

WCD9370

Title	Page Name = 20_WCD6370
DOCUMENT NO.:	Design Name = 588731_1_12_20200730
REV:	V3D
Size	Custom
DEPARTMENT:	
DESIGNER	DESIGNER = zhanglaojiang
Date:	Page Modify Date = Monday, July 27, 2020
Sheet	20 of 84

VERSION	EDITED BY	LAST EDIT DATE
1	LAST_EDITOR	2-23-2007_10:06

CONFIDENTIAL AND PROPRIETARY - QUALCOMM TECHNOLOGIES, INC.
NOT TO BE USED, COPIED, REPRODUCED, OR MODIFIED IN WHOLE OR IN PART, NOR ITS CONTENTS REVEALED IN ANY MANNER TO OTHERS WITHOUT THE EXPRESS WRITTEN PERMISSION OF QUALCOMM TECHNOLOGIES, INC.
THIS TECHNICAL DATA MAY BE SUBJECT TO U.S. AND INTERNATIONAL EXPORT, RE-EXPORT, OR TRANSFER ("EXPORT") LAWS. DIVERSION CONTRARY TO U.S. AND INTERNATIONAL LAW IS STRICTLY PROHIBITED.

REVISIONS

LTR	DESCRIPTION	DATE	APPROVED
A	INITIAL RELEASE		

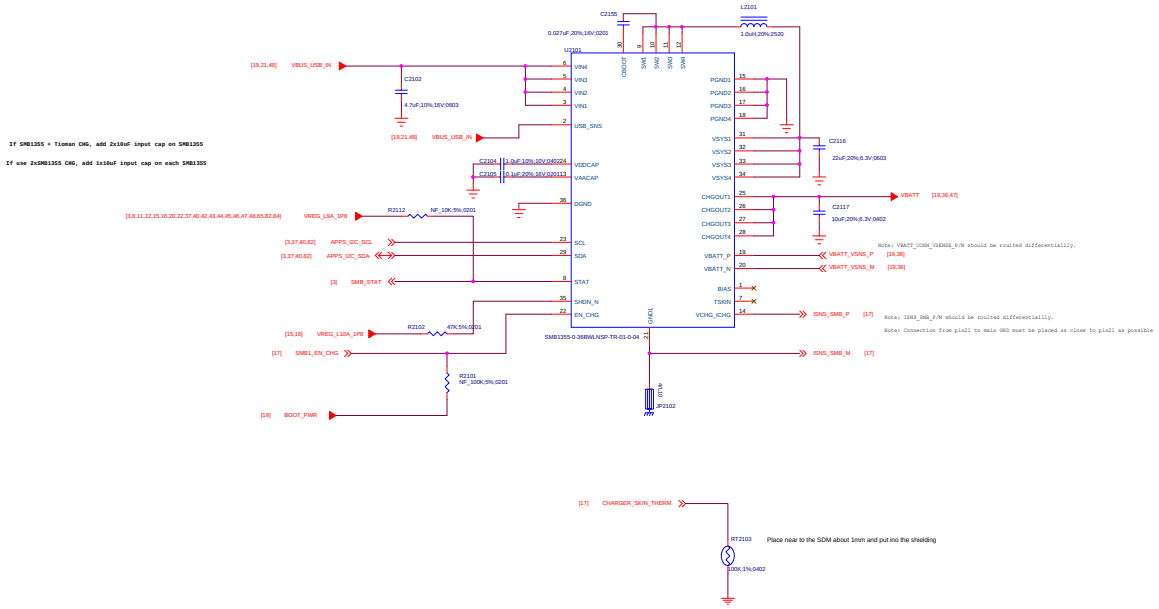

CAM eLDOs

Title	Page Name = 21_PMIC_SMB135S
DOCUMENT NO.:	Design Name = S88731_1_12_20200730_1004 Custom
DEPARTMENT:	DESIGNER = zhangliqiang
Date:	Page Modify Date = Monday, July 27, 2020 Sheet 21 of 84

VERSION	EDITED BY	LAST EDIT DATE
1	LAST_EDITOR	2-23-2007_10:06

CONFIDENTIAL AND PROPRIETARY - QUALCOMM TECHNOLOGIES, INC.
NOT TO BE USED, COPIED, REPRODUCED, OR MODIFIED IN WHOLE OR IN PART, NOR ITS CONTENTS REVEALED IN ANY MANNER TO OTHERS WITHOUT THE EXPRESS WRITTEN PERMISSION OF QUALCOMM TECHNOLOGIES, INC.
THIS TECHNICAL DATA MAY BE SUBJECT TO U.S. AND INTERNATIONAL EXPORT, RE-EXPORT, OR TRANSFER ("EXPORT") LAWS. DIVERSION CONTRARY TO U.S. AND INTERNATIONAL LAW IS STRICTLY PROHIBITED.

REVISIONS

LTR	DESCRIPTION	DATE	APPROVED
A	INITIAL RELEASE		

CAM eLDOs

LDO for MAIN MARO CAM AF

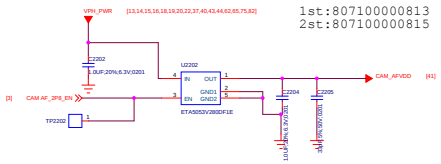

LDO for MACRO DEPTH AVDD 2.8V

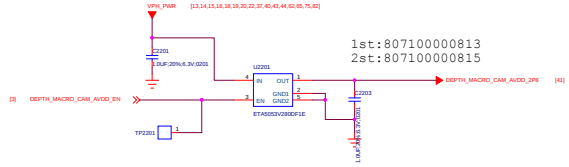

LDO for mian front AVDD 2.8V

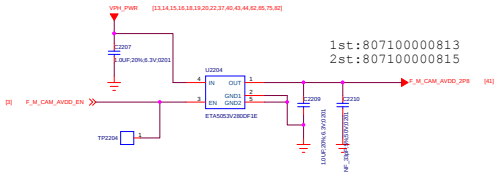

CAM_ DVDD_1P1/1P2 1000MA

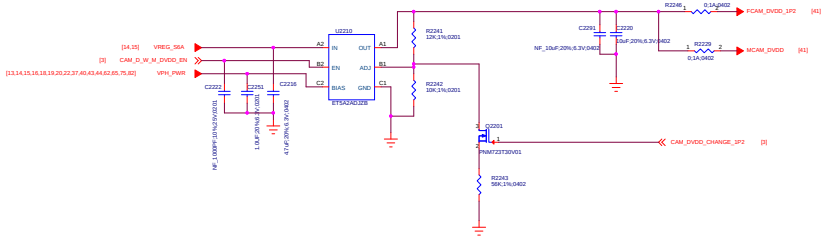

LDO for CAM VDDIO

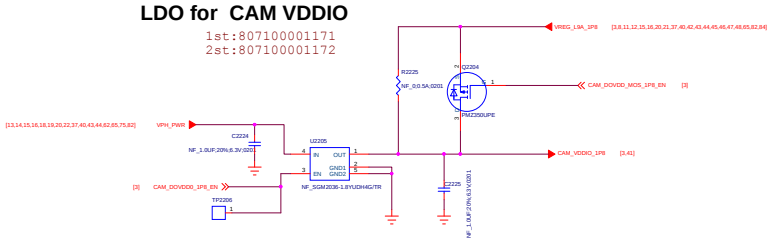

Title	Page Name = 22_CAM eLDOs	REV: V10
DOCUMENT NO.:	Design Name = 588731_1_12_20200730_1604	Custom
DEPARTMENT:	DESIGNER = DESIGNER	
Date:	Page Modify Date = Monday, July 27, 2020	Sheet 22 of 86

VERSION	EDITED BY	LAST EDIT DATE
1	LAST_EDITOR	2-23-2007_10:06

BATTERY CONNECTOR

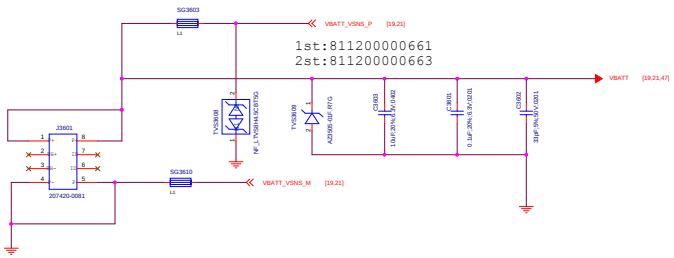

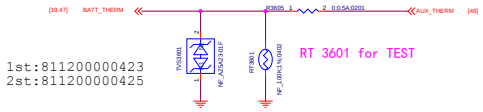

Title	Page Name = 36_Battery/USB_IF	REV A/10
DOCUMENT NO.:	Design Name = 588731_1_12_20200730094	D
DEPARTMENT:	DESIGNER = zhangliaojiang	
Date: Page Modify Date = Monday, July 27, 2020	Sheet 36 of 84	

SPK/Receiver/Vibrator

AUDIO PA

address=0X68(W)/0X69(R)

SH3701 close to PM4250

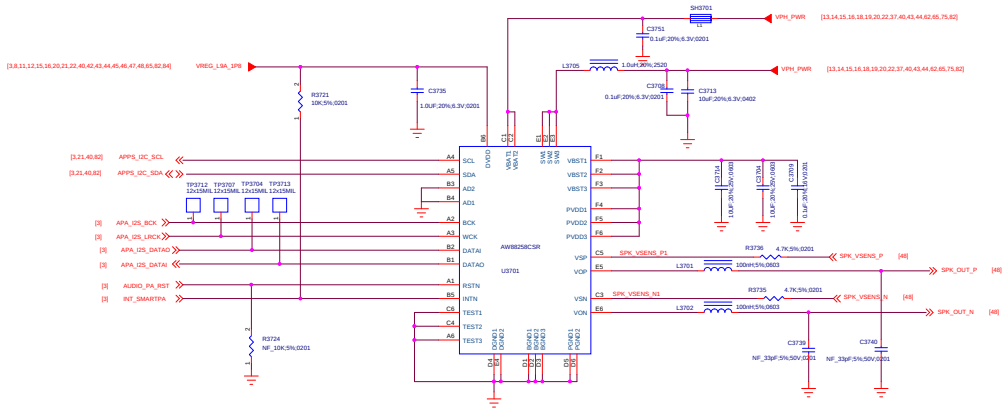

RECEIVER

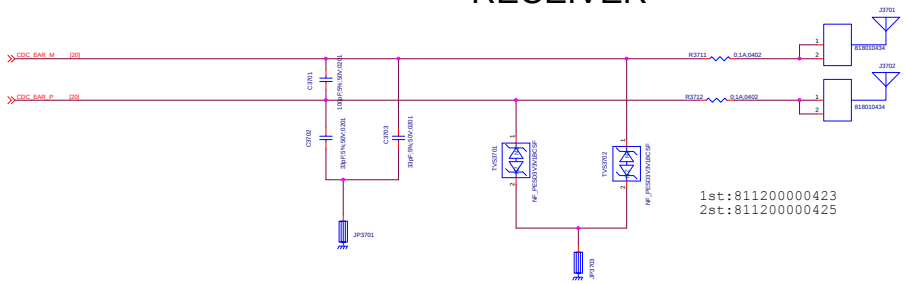

MIC

TOP MIC

AUX MIC1 Place to Main Board

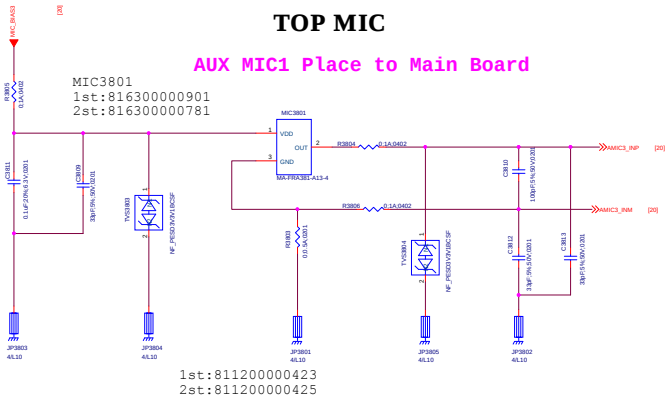

Main MIC

Main MIC Place to SUB Board

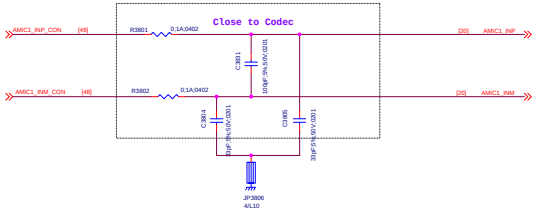

Title	Page Name = 38_MIC	REV: V10
DOCUMENT NO.:	Design Name = S88731_1_12_20200730184	D
DEPARTMENT:	DESIGNER = zhanglejiang	
Date: Page Modify Date = Monday, July 27, 2020	Sheet 38 of 84	

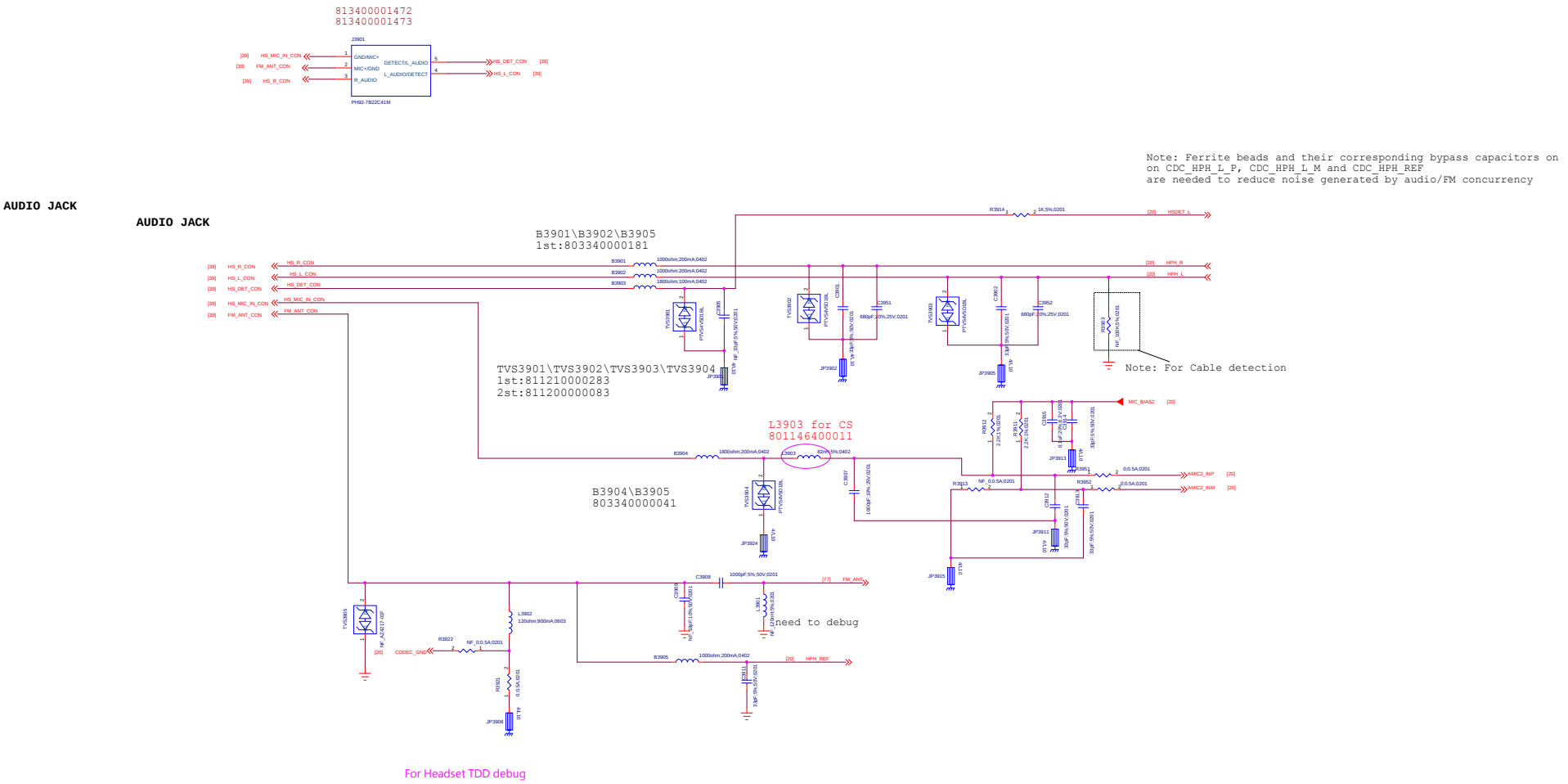

Title	Page Name = 39_Earphone	REV: V10
DOCUMENT NO.:	Design Name = S88731_1_12_20200730_004	D
DEPARTMENT:	DESIGNER = zhangliaojiang	
Date: Page Modify Date = Monday, July 27, 2020	Sheet 39 of 84	

LCD-Connector

LCD-Connector

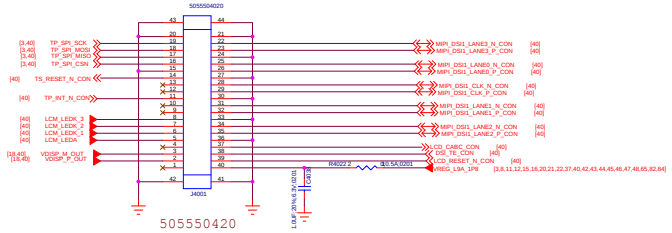

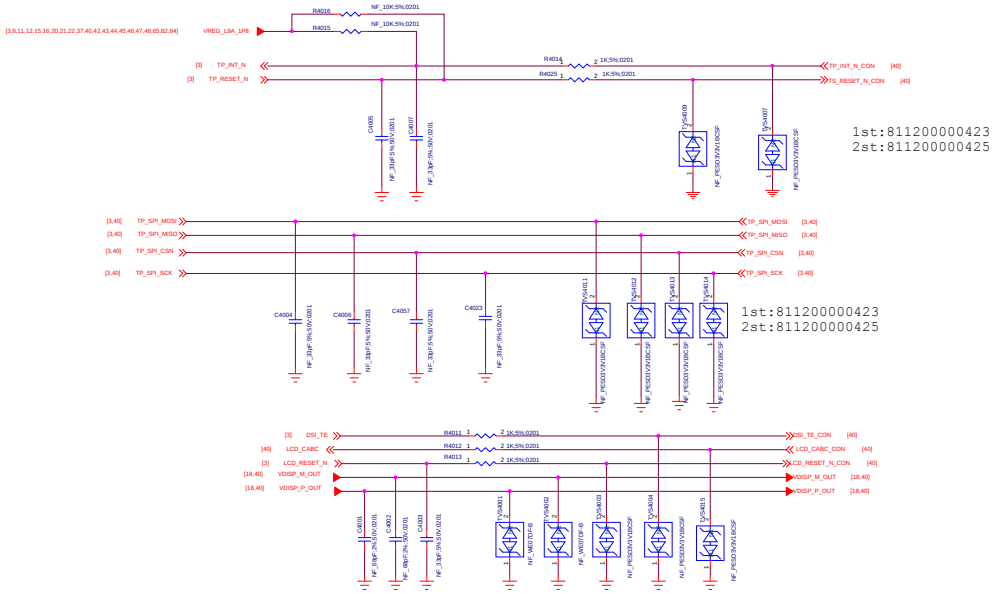

LCD-BACKLIGHT

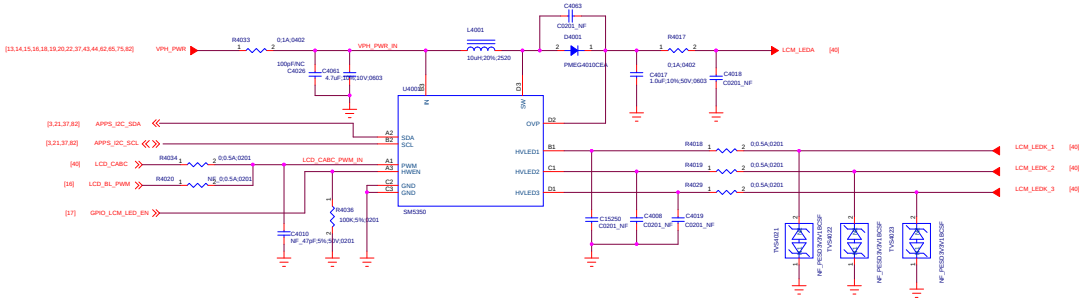

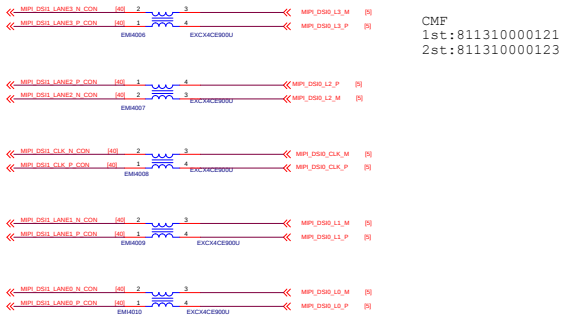

Title	Page Name = 40_LCD/CTP
REV:	V10
DOCUMENT NO.:	Design Name = S88731_1_12_20200730_1314
	D
DEPARTMENT:	DESIGNER = zhanglieqiang
Date:	Page Modify Date = Monday, July 27, 2020
Sheet	40 of 84

Main Camera 64M

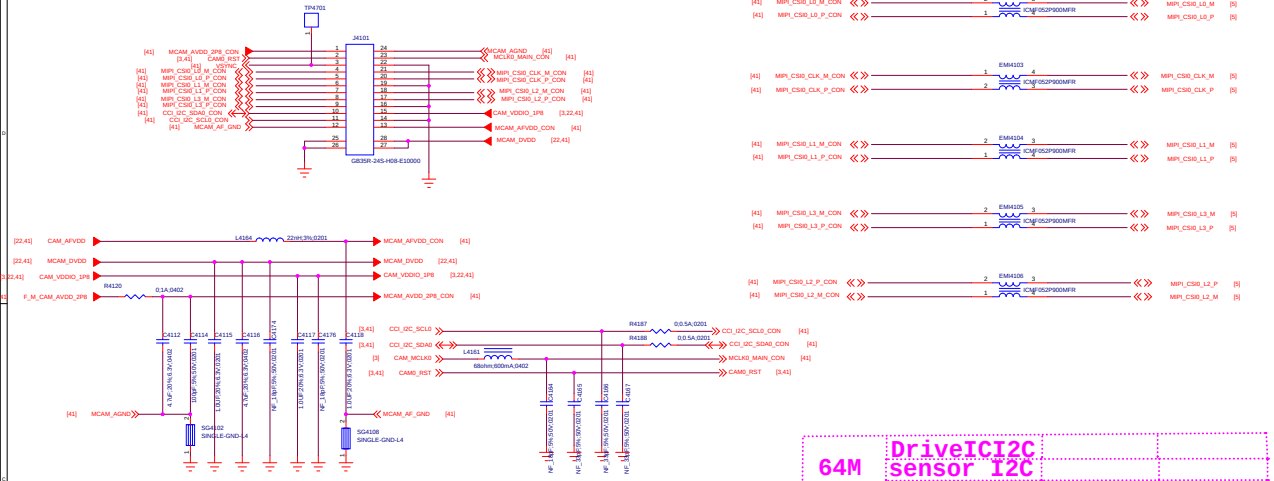

64M	DriveICI2C		
	sensor I2C		
	EEPROM I2C		

2M Macro Camera 5MP wide compatible

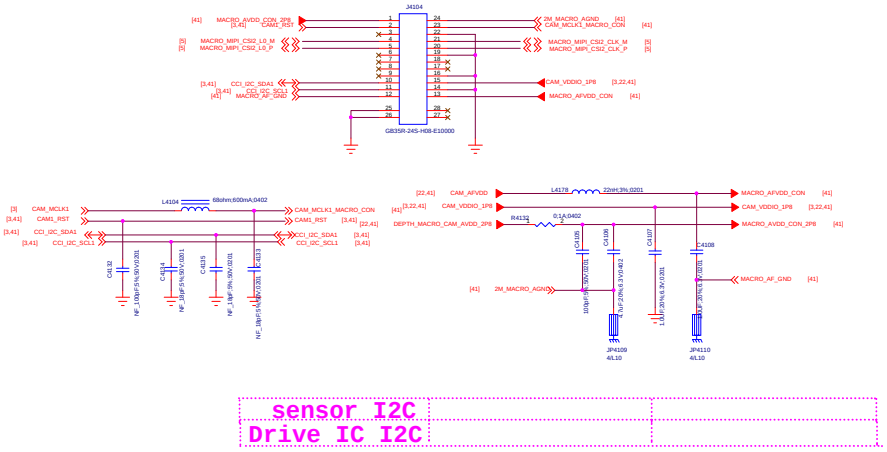

sensor I2C		
Drive IC I2C		

2M Depth Camera

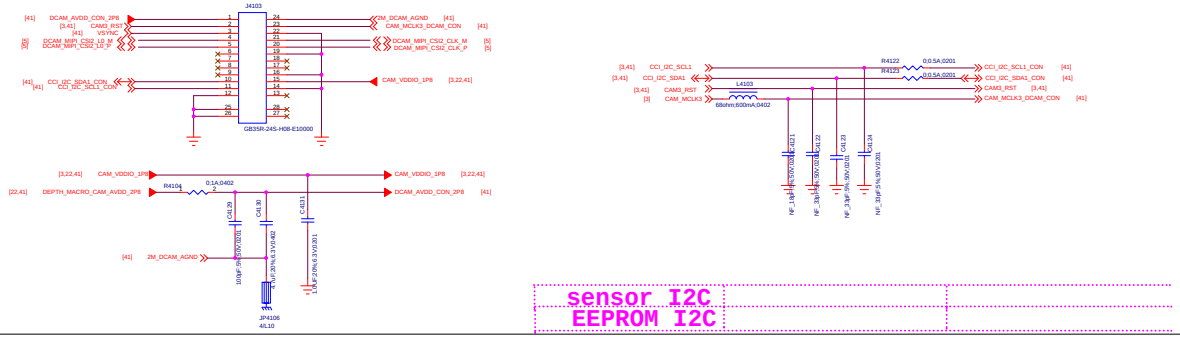

sensor I2C		
EEPROM I2C		

Front Camera 8M compatible 5M

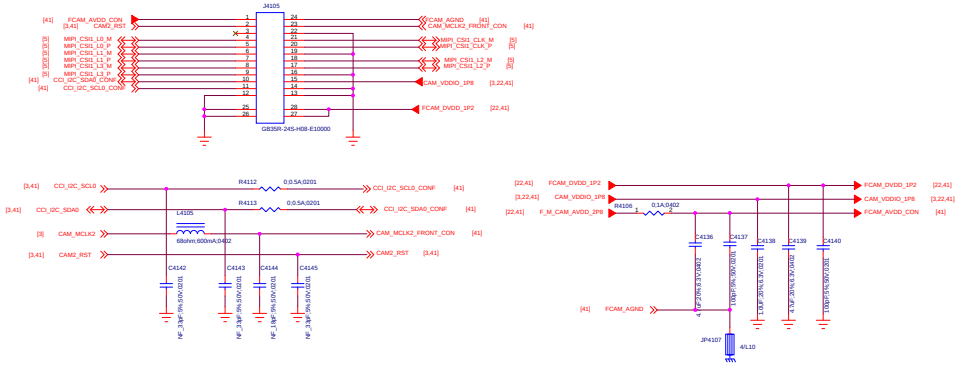

Title	Page Name = 41_Camera IF	REV: V10
DOCUMENT NO.:	Design Name = 588731_1_12_20200730_1314	D
DEPARTMENT:	DESIGNER = zhanglianjiang	
Date:	Page Modify Date = Monday, July 27, 2020	Sheet 41 of 84

FLASH_DRIVER

FLASH_DRIVER & FIR

SKU3/4 No FIR: SMT R4202 J4209 J4210,NF R4201 R4211 R4212 J4207 J4208
SKU5/6 FIR: SMT R4201 R4211 R4212 C4202 J4207 J4208 J4209 J4210,NF R4202

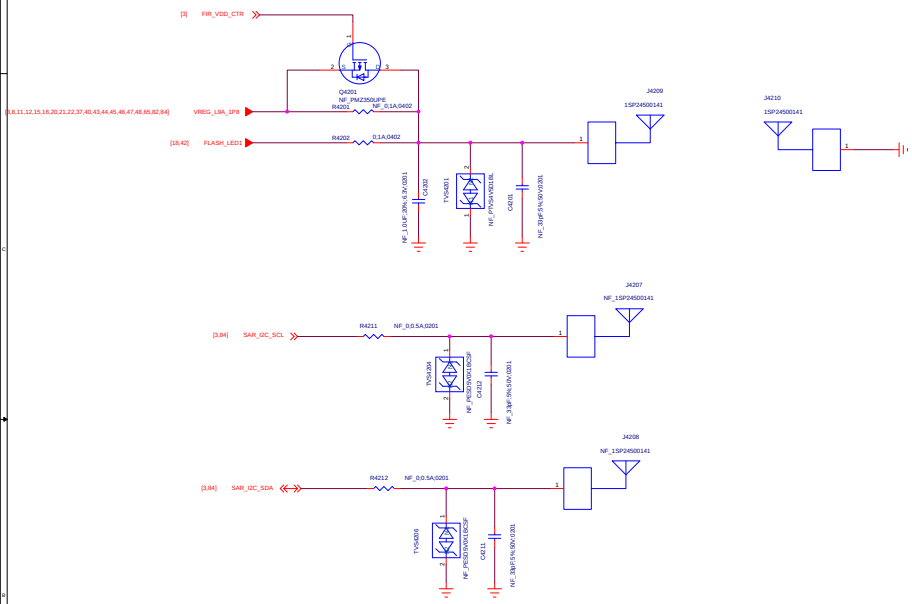

FLASH_DRIVER for SKU5\6

SKU3/4 No FIR: NF J4201 J4202
SKU5/6 FIR: SMT J4201 J4202

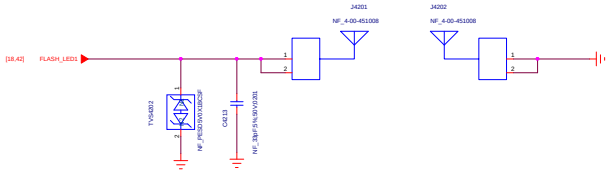

LED_DRIVER

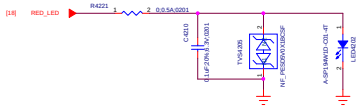

Title	Page Name = 42_Flash_LED/FIR	REV
DOCUMENT NO.:	Design Name = S88731_1_12_20200730_1164	D
DEPARTMENT:	DESIGNER = zhanglieqiang	
Date: Page Modify Date = Monday, July 27, 2020	Sheet 42 of 84	

Fingerprint

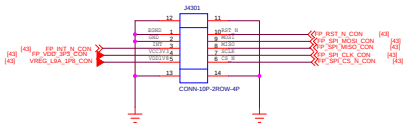

FPS LDO 3.3V

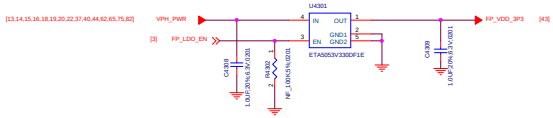

1st:807100001166
2st:807100001165

U4301 for FPS

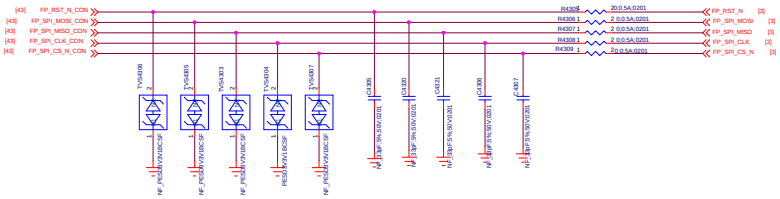

1st:811200000423
2st:811200000425

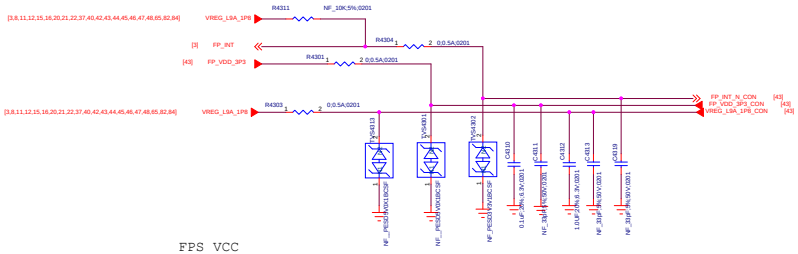

FPS VCC
1st:811210000441
2st:811210000372
FPS VCC signal
1st:811200000423
2st:811200000425

Title	Page Name = 43_Fingerprint	REV:	V10
DOCUMENT NO.:	Design Name = S88731_1_12_20200730_184	SIZE	D
DEPARTMENT:		DESIGNER = zhanglieqiang	
Date:	Page Modify Date = Monday, July 27, 2020	Sheet 43 of 84	

Sensor

A+G SENSOR

ACCELEROMETER+GYRO

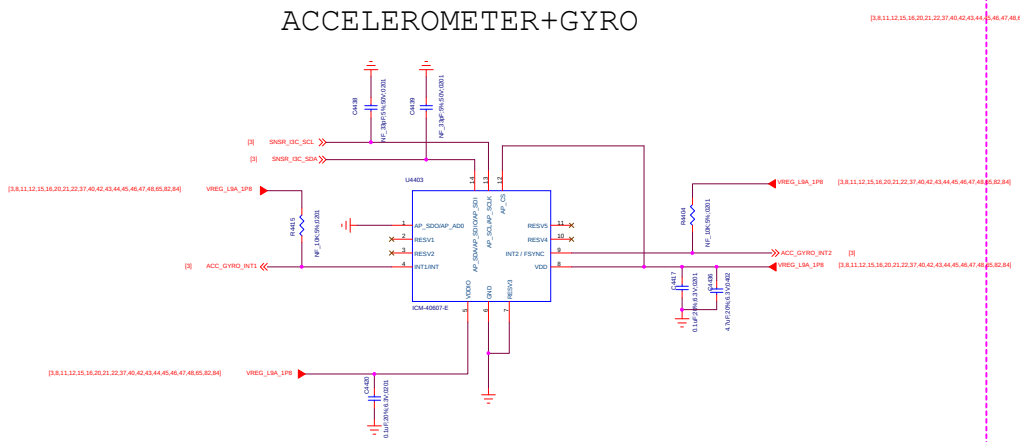

Proximity&Ambient Light Sensor

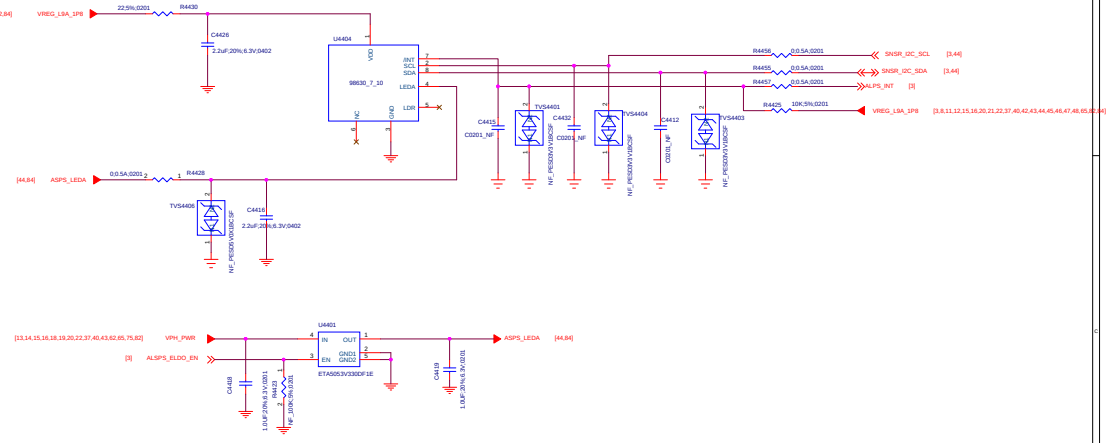

STK33562(0x46)

I2C	0x8C(W)0x8D(R)

Magnetic Sensor

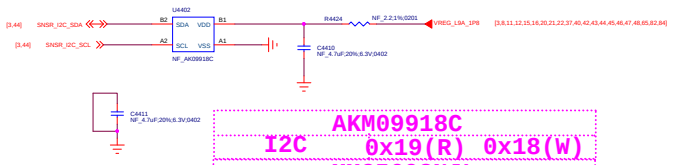

AKM09918C

I2C	0x19(R) 0x18(W)

MMC5603NJL

I2C	0x60(R) 0x61(W)

Title	Page Name = 44_Sensor	REV: V10
DOCUMENT NO.:	Design Name = S88731_1_12_20200730184	D
DEPARTMENT:	DESIGNER = zhanglieqiang	
Date:	Page Modify Date = Monday, July 27, 2020	Sheet 44 of 84

SIM/TF IF

TF CARD

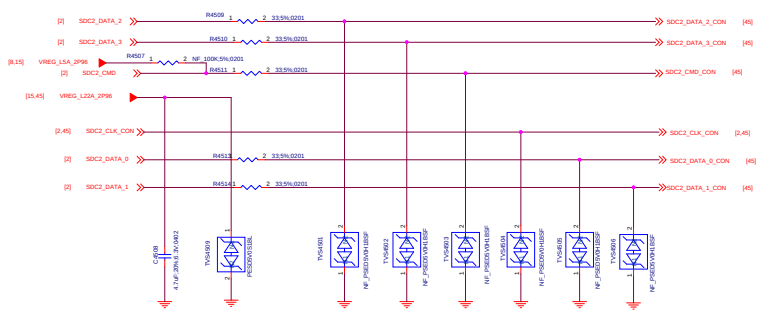

SD VCC
1st:811210000112
2st:811210000117
SD signal
1st:811210000431
2st:811210000351

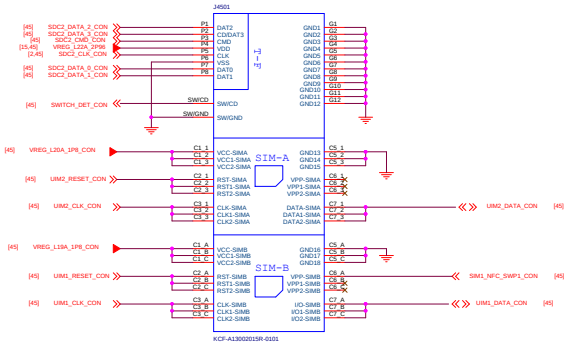

USIM1

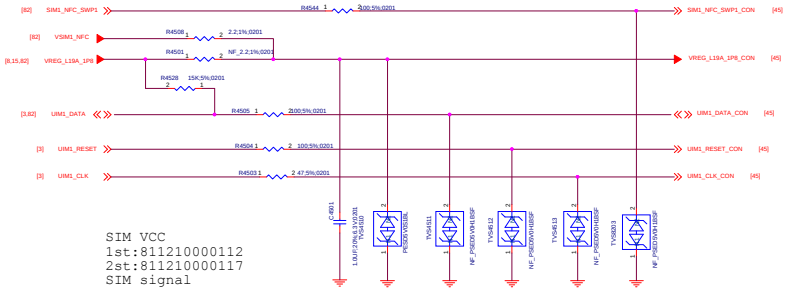

SIM VCC
1st:811210000112
2st:811210000117
SIM signal
1st:811210000431
2st:811210000351

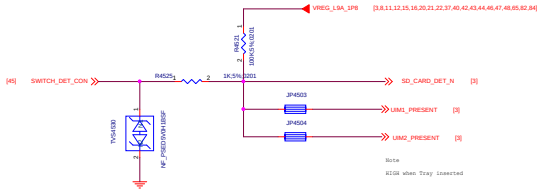

1st:811210000431
2st:811210000351

USIM2

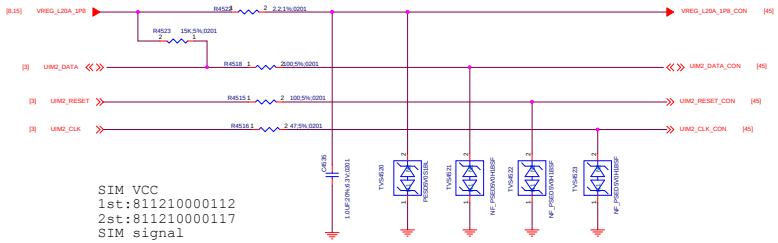

SIM VCC
1st:811210000112
2st:811210000117
SIM signal
1st:811210000431
2st:811210000351

Title	Page Name = 45_SIM/TF IF	REV: V10
DOCUMENT NO.:	Design Name = S88731_1_12_202007305004	D
DEPARTMENT:	DESIGNER = zhangliaojiang	
Date:	Page Modify Date = Monday, July 27, 2020	Sheet 45 of 84

Keys

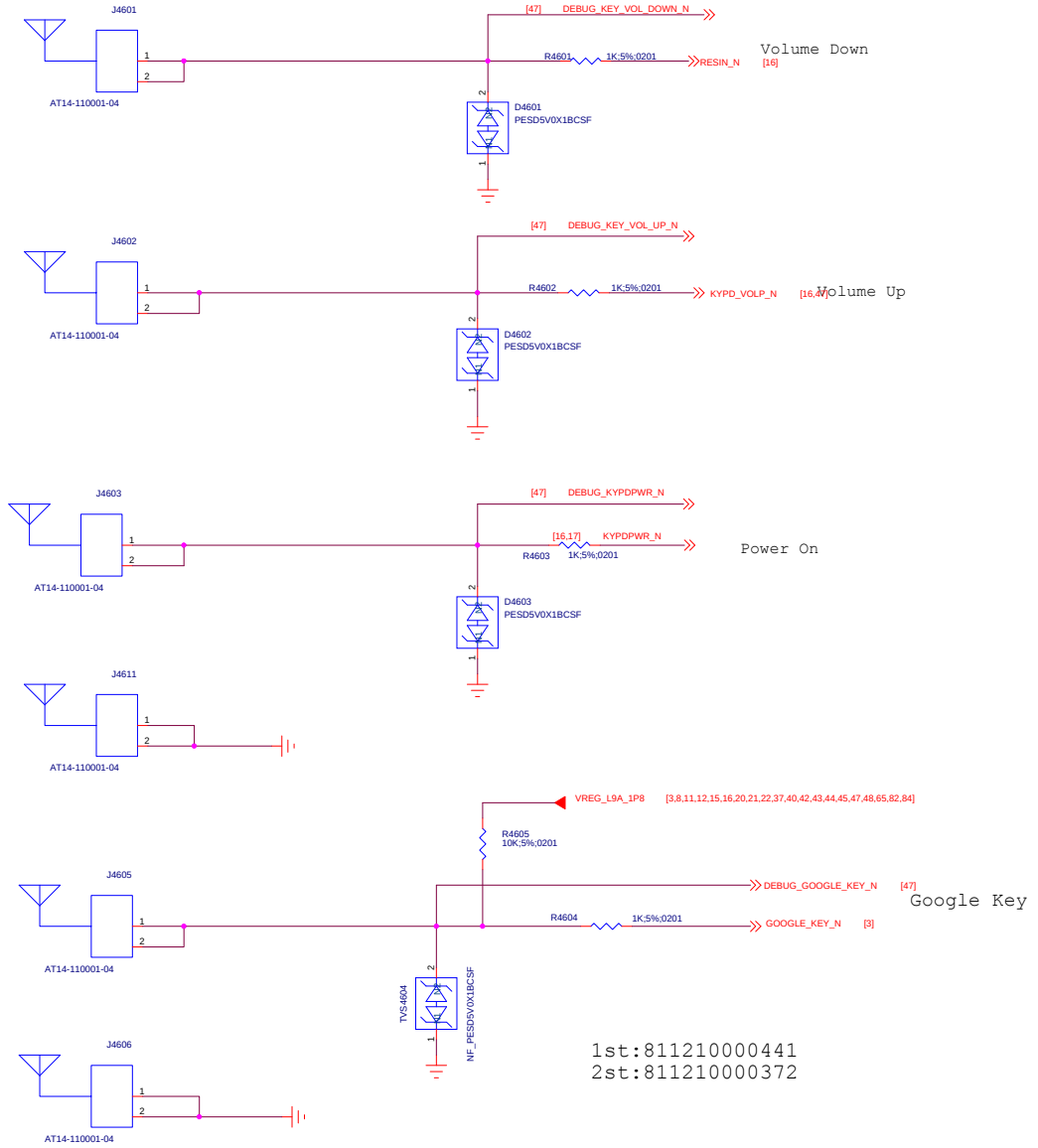

Schematic design notice of "75_PERI_KEYPAD" page.

Note 75-1: DO NOT put pull-up resistor on PWRKEY

Note 75-2: Volume Up : HOME Key / GND
Volume Down : KPROW0/KPCOL0

Title	Page Name = 46_Sidekey	REV: V10
DOCUMENT NO.:	Design Name = S88731_1_12_20200730_1034	C
DEPARTMENT:	DESIGNER = zhanglieqiang	
Date:	Page Modify Date = Monday, July 27, 2020 Sheet 46 of 84	

USB

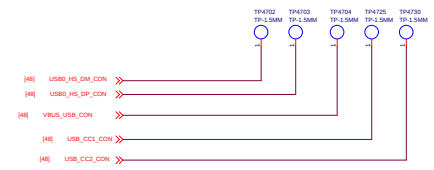

KEYS

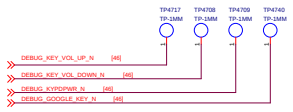

9008 download

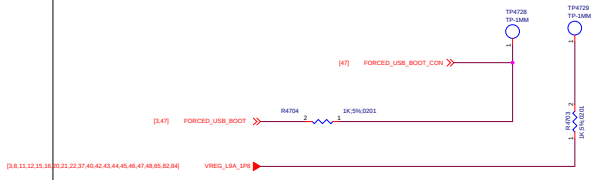

BOARD ID

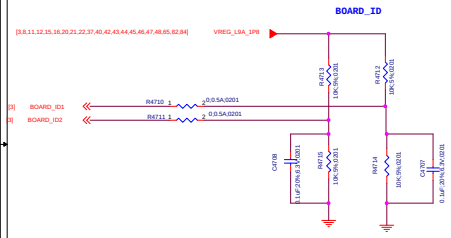

JTAG CONNECTOR

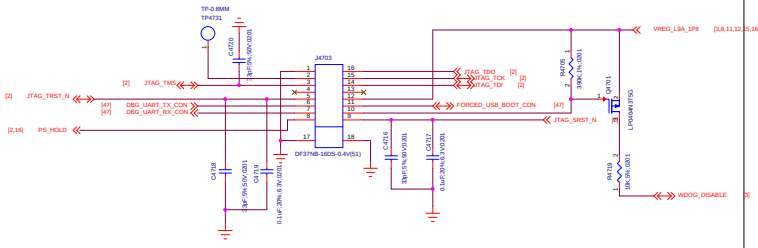

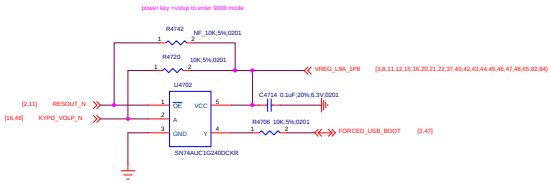

UART

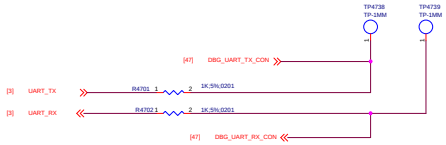

BATTERY

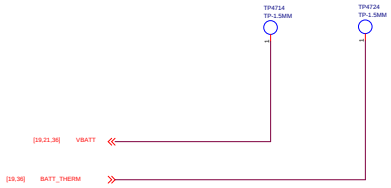

GND

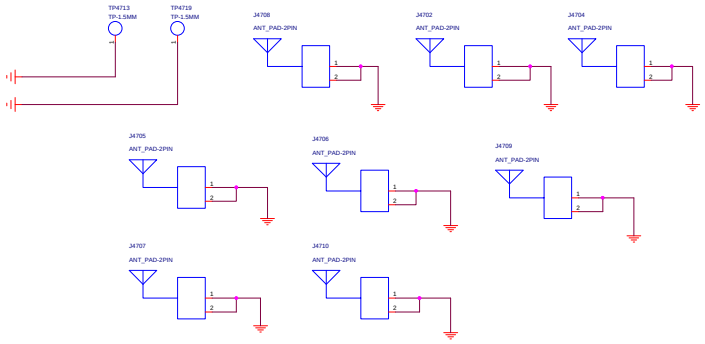

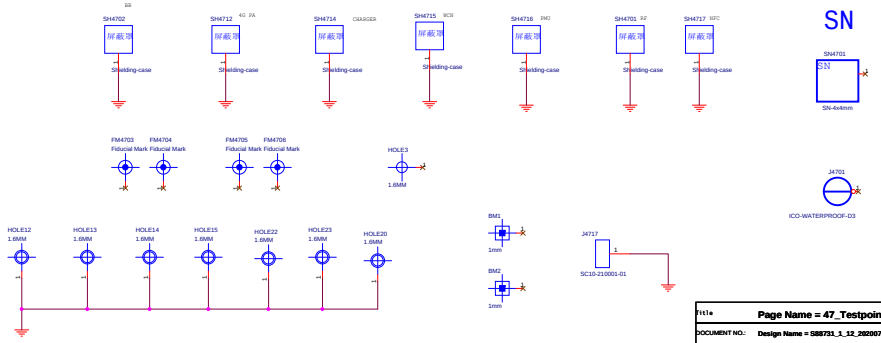

Title	Page Name = 47_Testpoint/Shielding/GND		
DOCUMENT NO.:	Design Name = S88731_1_12_20200730_1114		D
DEPARTMENT:		DESIGNER = zhanglexiang	
Date:	Page Modify Date = Monday, July 27, 2020	Sheet 47 of 84	

Sub-Board Connector

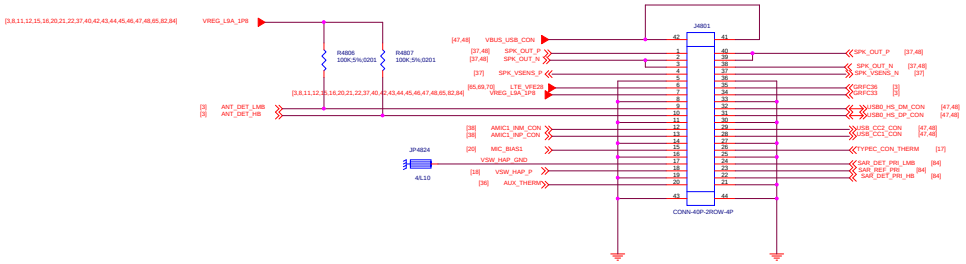

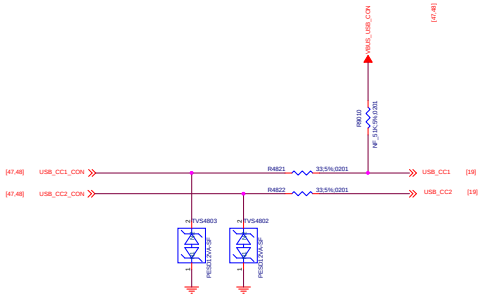

TO CPU

OVP

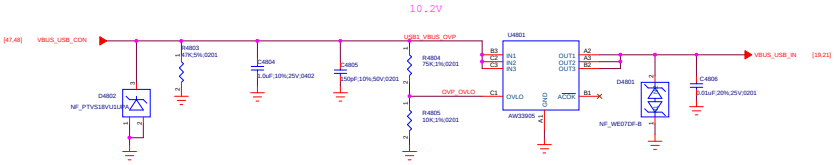

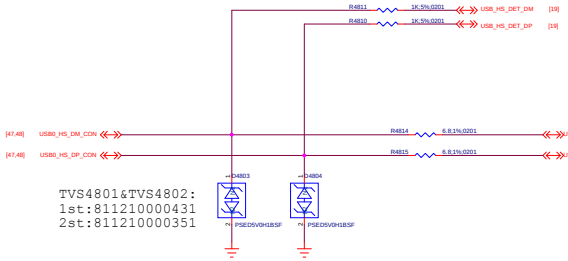

TO PMI

TO CPU

TVS4801&TVS4802:
1st:811210000431
2st:811210000351

Title	Page Name = 48_Sub PCB I	REV: V10
DOCUMENT NO.:	Design Name = S88731_1_12_20200730184	D
DEPARTMENT:	DESIGNER = zhanglaojiang	
Date:	Page Modify Date = Monday, July 27, 2020	Sheet 48 of 84

Title	56.RF Interface		REV: V10
DOCUMENT NO.:	S86731_1_12_202007301634		Size D
DEPARTMENT:	HARDWARE DEPARTMENT	DESIGNER:	LIUXIAOFENG
Date:	Monday, July 27, 2020	Sheet 56 of 82	

Title	57.Block Diagram		REV: V10
DOCUMENT NO.:	S86731_1_12_202007301634		Size D
DEPARTMENT:	HARDWARE DEPARTMENT	DESIGNER:	LIUXIAOFENG
Date:	Monday, July 27, 2020	Sheet 57 of 82	

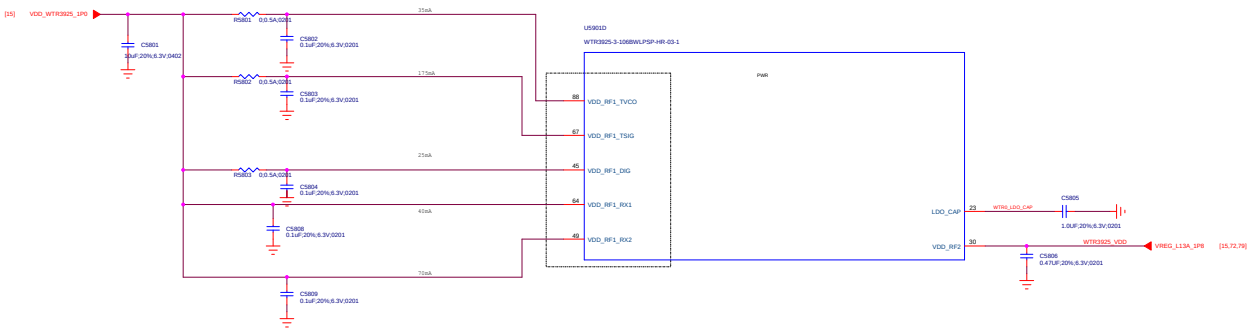

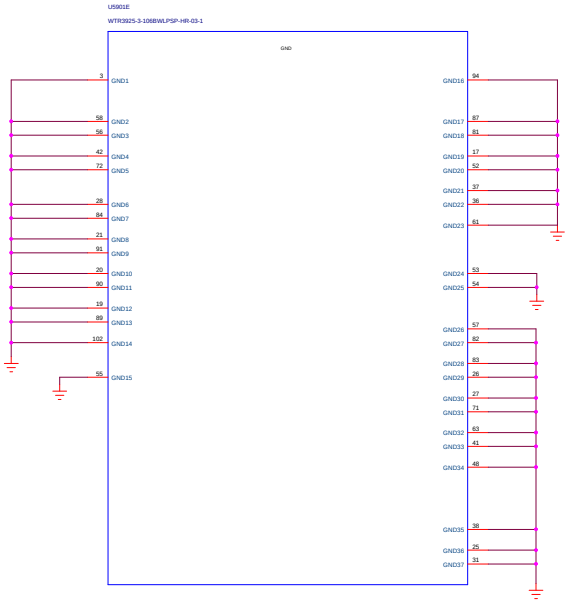

WTR2965:PWR

Title	58.WTR3925:PWR		REV: V10
DOCUMENT NO.:	S88731_1_12_202007301634		Size D
DEPARTMENT:	HARDWARE DEPARTMENT	DESIGNER:	LIUXIAOFENG
Date:	Monday, July 27, 2020	Sheet 58 of 82	

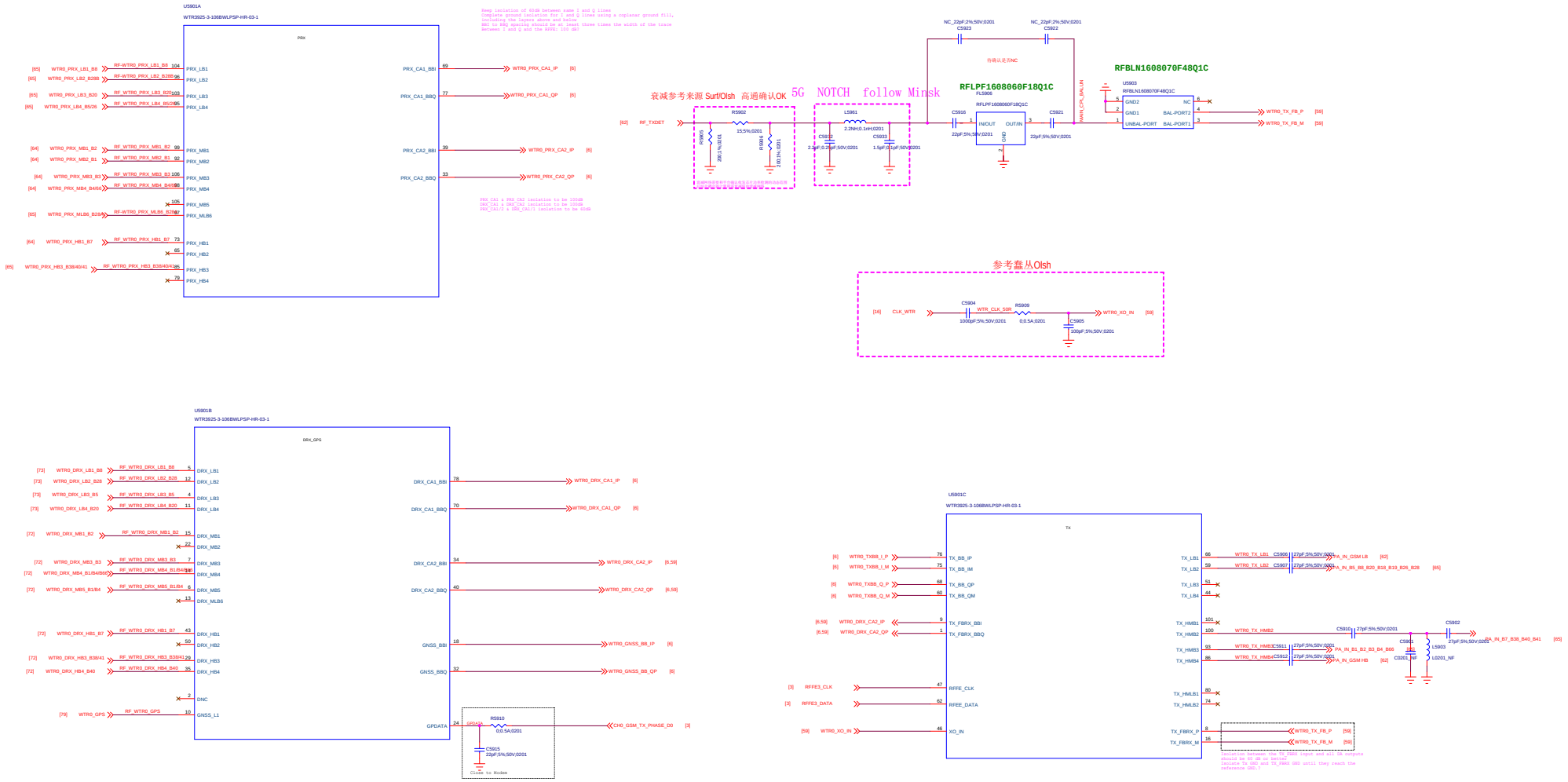

Title	59.WTR3925:MS5	REV:	V10
DOCUMENT NO.:	S88731_1_12_202007301614	Size	D
DEPARTMENT: HARDWARE DEPARTMENT		DESIGNER:	LIUXIAOFENG
Date: Monday, July 27, 2020		Sheet 59 of 82	

Primary_MLB

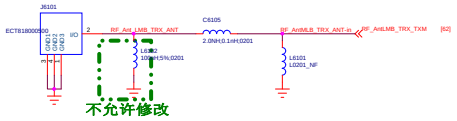

Primary_HB

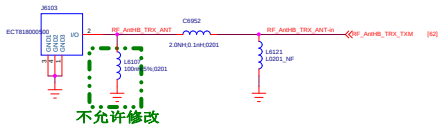

Primary Ant

Title	61.Primary Ant		REV: V10
DOCUMENT NO.:	S86731_1_12_202007301634		Size D
DEPARTMENT:	HARDWARE DEPARTMENT	DESIGNER:	LIUXIAOFENG
Date:	Monday, July 27, 2020	Sheet 61 of 82	

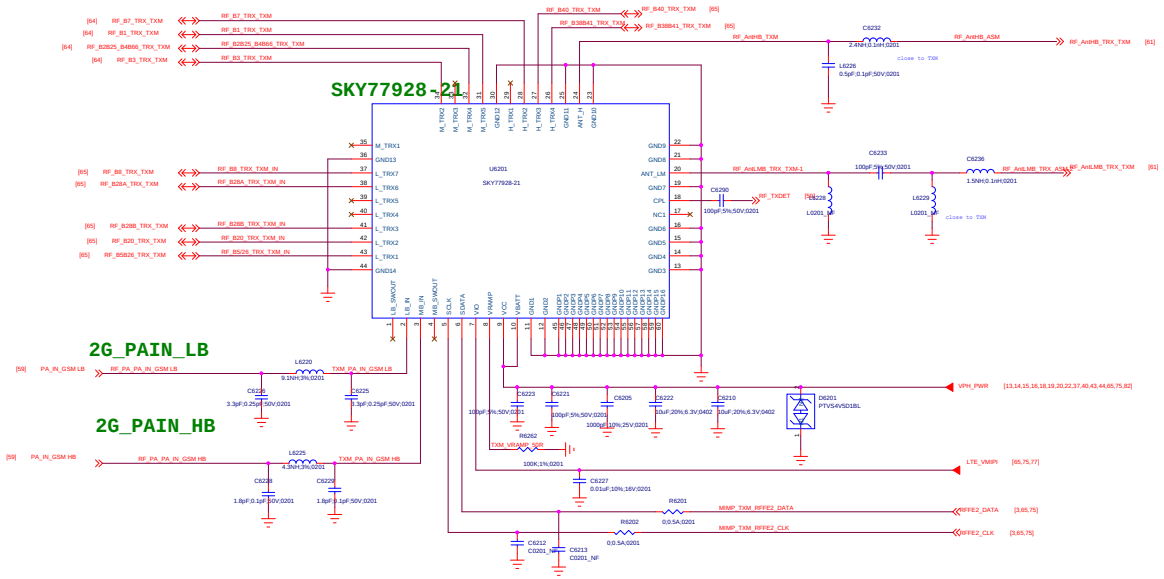

Title	62.Primary ASM		REV: V10
DOCUMENT NO.:	S88731_1_12_202007301614		Size D
DEPARTMENT:	HARDWARE DEPARTMENT	DESIGNER:	LIUXIAOFENG
Date:	Monday, July 27, 2020	Sheet 62 of 82	

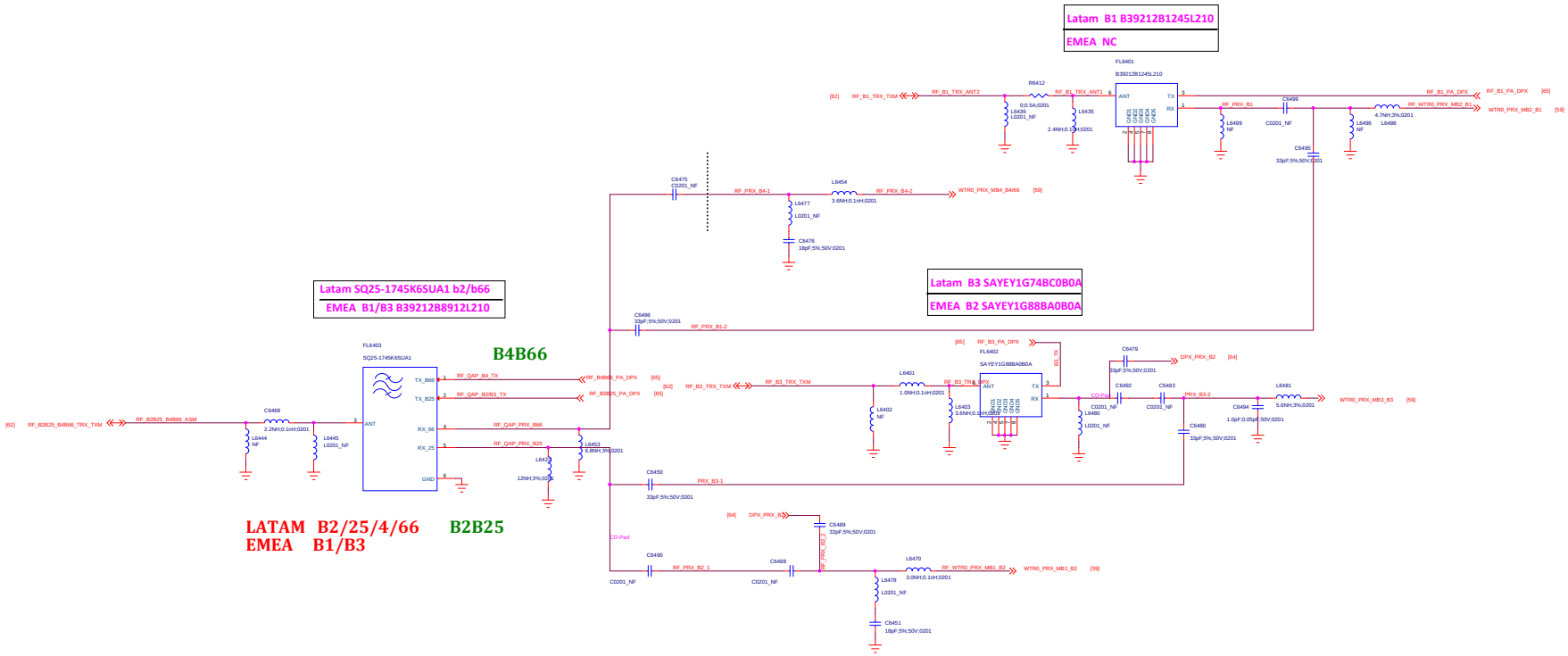

B39272B8697P810

Band7

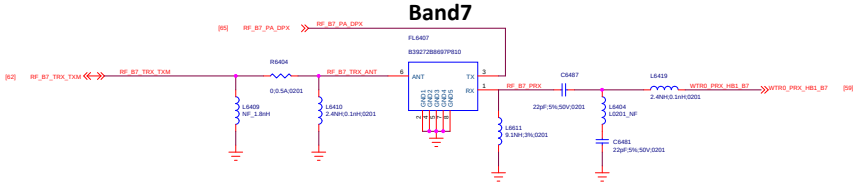

Title:	64.TRX_MHB		REV: V10
DOCUMENT NO.:	S88731_1_12_202007301614		Size D
DEPARTMENT:	DEPARTMENT	DESIGNER:	DESIGNER
Date:	Monday, July 27, 2020	Sheet	64 of 82

EMEA B26

Latam B5 SFX836EYJ02 暂时无库
EMEA B26 D5DA876M5K2P6

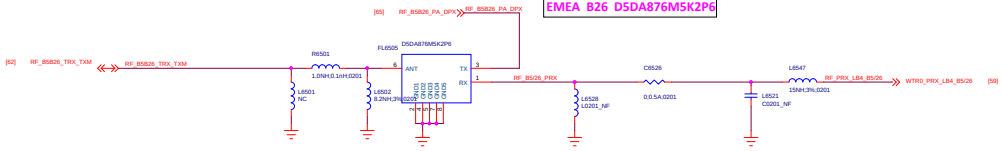

Band8

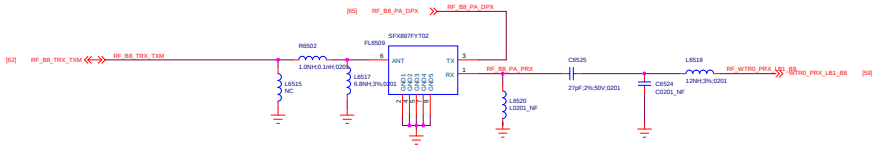

Band20

Latam NC
EMEA B20 SD18-0847R8UUB1

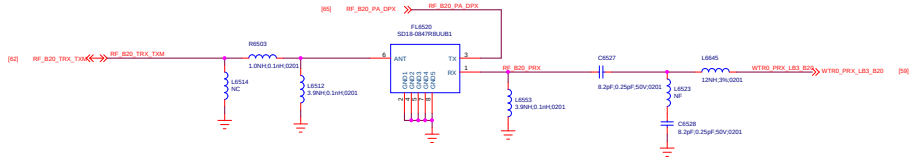

B39791B853P810暂时无库

Band 28B

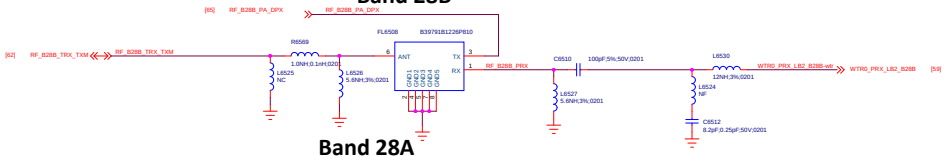

Band 28A

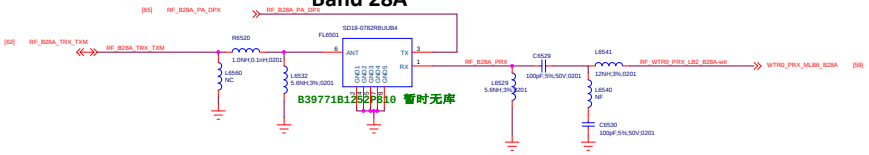

B39771B1282P810 暂时无库

Title	65.TRX_LB		REV: V10
DOCUMENT NO.:	SB8731_1_12_202007303134		Size D
DEPARTMENT:	HARDWARE DEPARTMENT	DESIGNER:	LIUXIAOFENG
Date:	Monday, July 27, 2020	Sheet 65 of 82	

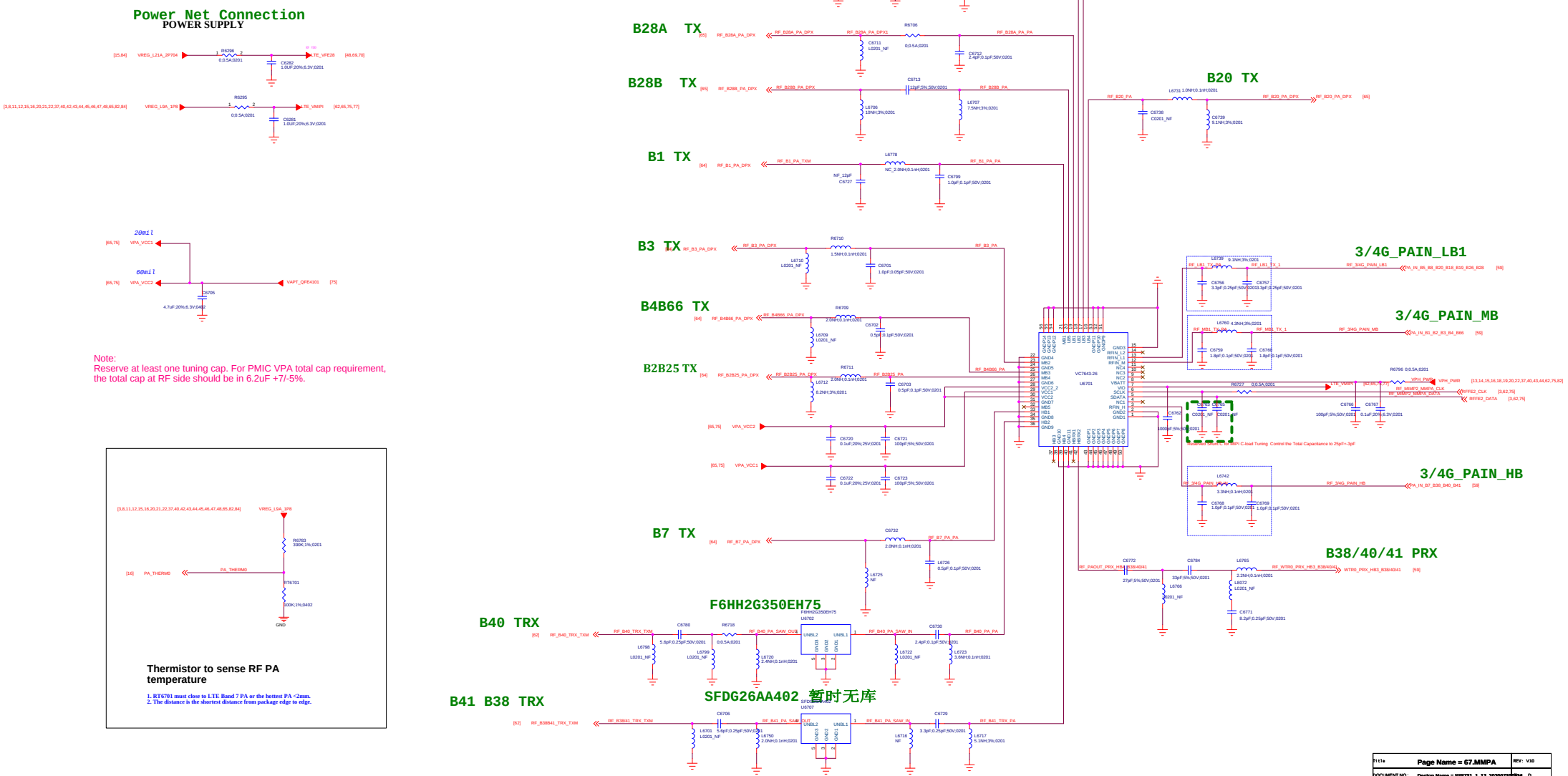
Power Net Connection
POWER SUPPLY
B8 TX
B5/B26 TX
B28A TX
B28B TX
B1 TX
B3 TX
B4B66 TX
B2B25 TX
B7 TX
B40 TRX
B41 B38 TRX
F6HH2G350EH75
SFDG26AA402 暂时无库
B20 TX
3/4G_PAIN_LB1
3/4G_PAIN_MB
3/4G_PAIN_HB
B38/40/41 PRX
20mil
60mil
Note:
Reserve at least one tuning cap. For PMIC VPA total cap requirement, the total cap at RF side should be in 6.2uF +7/-5%.
Thermistor to sense RF PA temperature
1. RT6701 must close to LTE Band 7 PA or the hottest PA <2mm.
2. The distance is the shortest distance from package edge to edge.
Title
Page Name = 67.MMPA
REV: V10
DOCUMENT NO.:
Design Name = 588731_1_12_20200730
SIZE: D
DEPARTMENT:
DEPARTMENT = WINGTECH
DESIGNER:
DESIGNER = LIUFINGLEI
Date:
Page Modify Date = Monday, July 27, 2020
Sheet 65 of 88

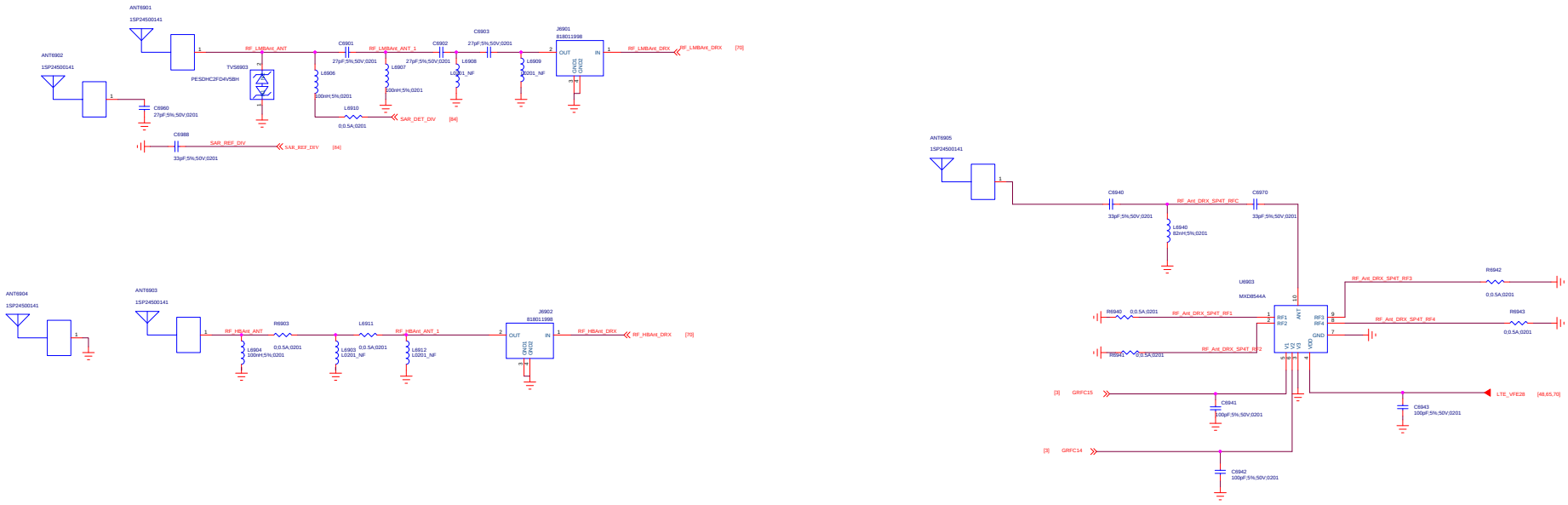

Diversity Ant

Title	69.Diversity Ant	REV:	V10
DOCUMENT NO.:	S88731_1_12_202007301634	Size	D
DEPARTMENT:	HARDWARE DEPARTMENT	DESIGNER:	LIUXIAOFENG
Date:	Monday, July 27, 2020	Sheet 69 of 82	

	V1	V2	
DRX_B7	0	0	
DRX_B40	1	1	
DRX_B41	0	1	

DRX_HB

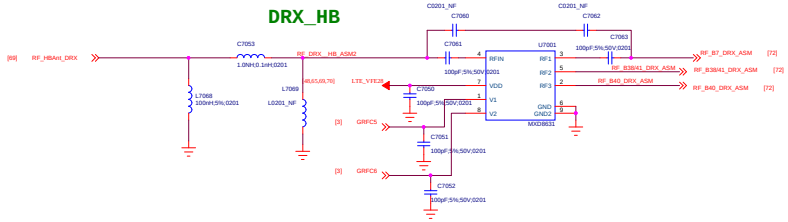

DRX_LMB

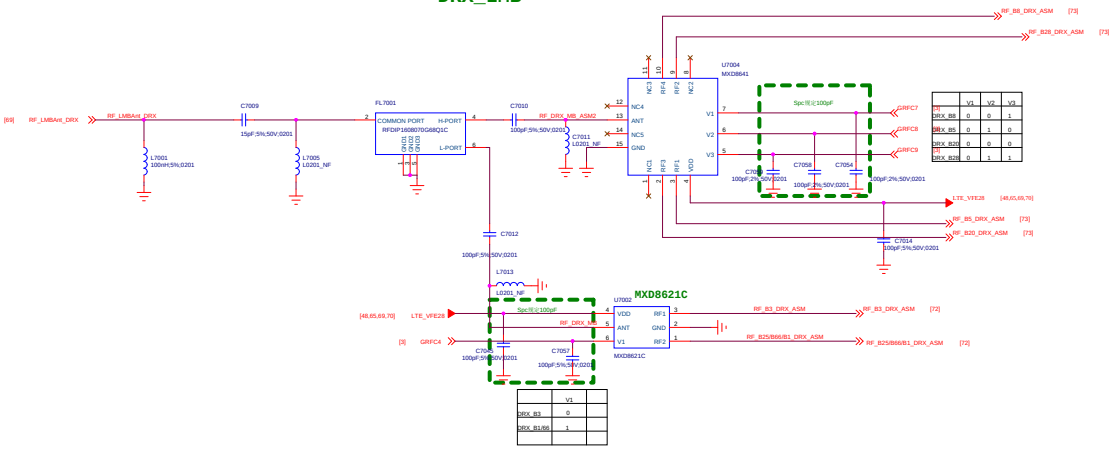

	V1	V2	V3
[3] DRX_B8	0	0	1
DRX_B5	0	1	0
DRX_B20	0	0	0
[3] DRX_B28	0	1	1

	V1	
DRX_B3	0	
DRX_B1/66	1	

Title	70.Diversity ASM		REV: V10
DOCUMENT NO.:	S88731_1_12_202007301634		Size D
DEPARTMENT:	HARDWARE DEPARTMENT	DESIGNER:	LIUXIAOFENG
Date: Monday, July 27, 2020		Sheet 70 of 82	

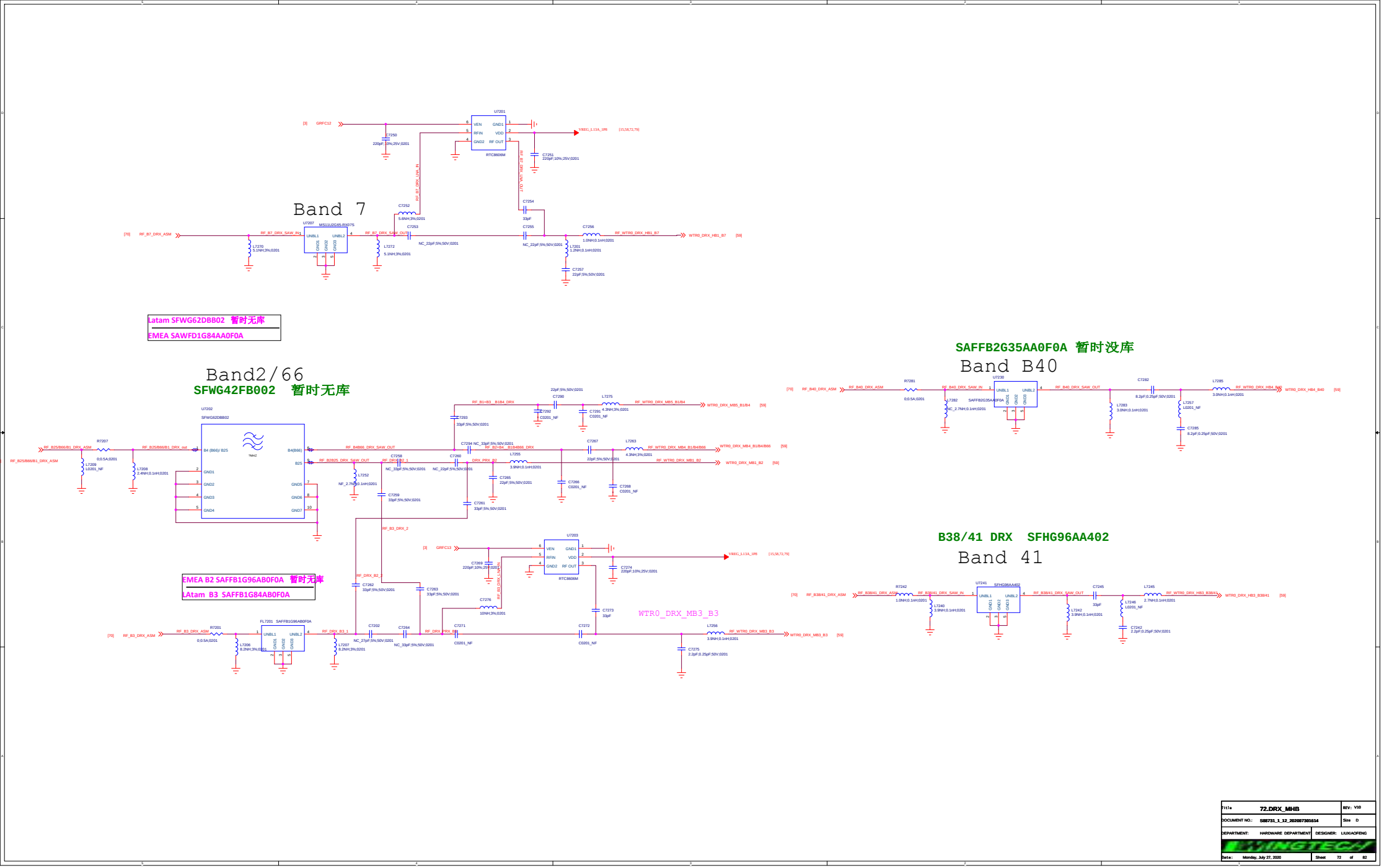

Title	72.DRX_MHB		REV: V10
DOCUMENT NO.:	S88731_1_12_202007301614		Size D
DEPARTMENT:	HARDWARE DEPARTMENT	DESIGNER:	LIUXIAOFENG
Date:	Monday, July 27, 2020	Sheet 72 of 82	

Band B5/26

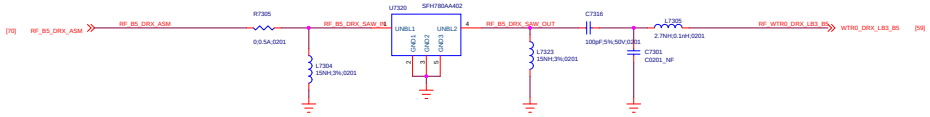

EMEA SAFFB806MAA0F0A 暂时无库

Band 20

EMEA SAFFB876MAA0F0A latam MS11U881M-RX05S

Band 28

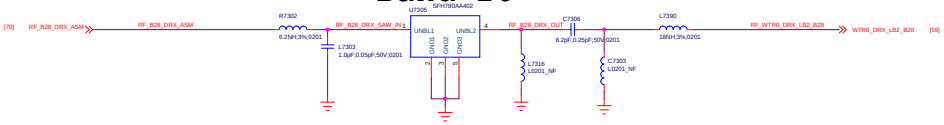

Band 8

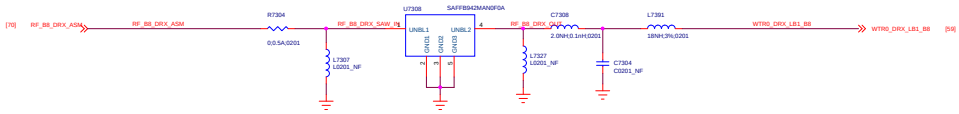

Title	73.DRX_LB		REV: V10
DOCUMENT NO.:	S88731_1_12_202007301614		Size D
DEPARTMENT:	HARDWARE DEPARTMENT	DESIGNER:	LIUXIAOFENG
Date:	Monday, July 27, 2020	Sheet 73 of 82	

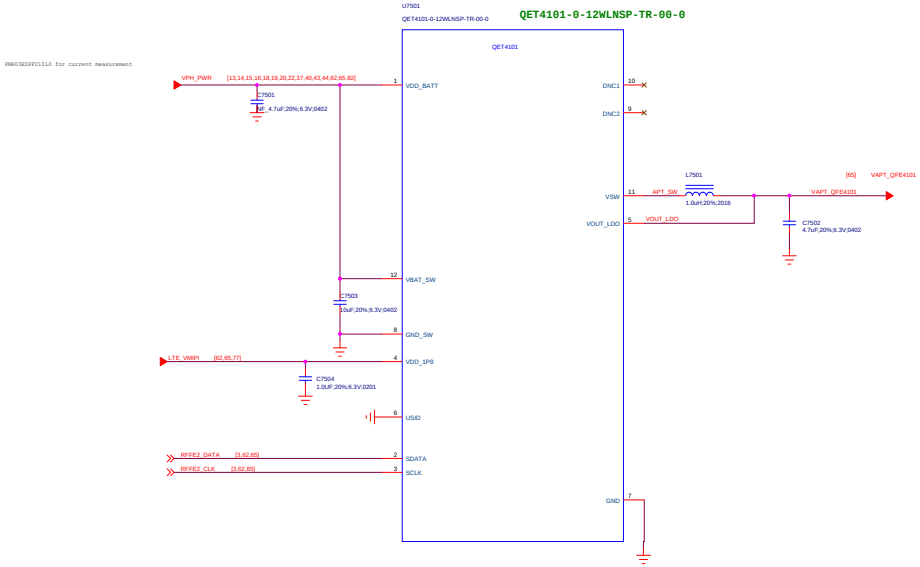

QET4101-0-12WLNSP-TR-00-0

ET_APT

Title	75.ET_APT	REV:	V10
DOCUMENT NO.:	S86731_1_12_202007301614	Size	D
DEPARTMENT:	HARDWARE DEPARTMENT	DESIGNER:	LIUXIAOFENG
Date:	Monday, July 27, 2020	Sheet	75 of 82

WCN3950

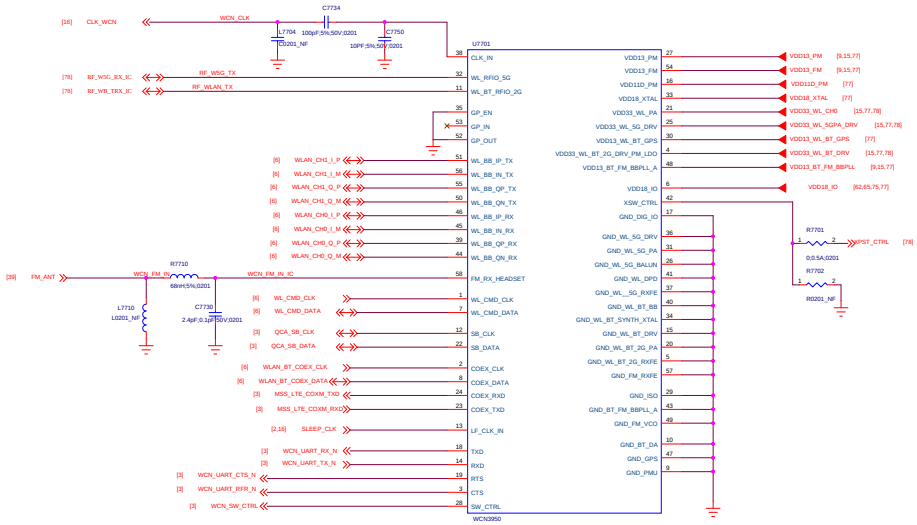

3.3V

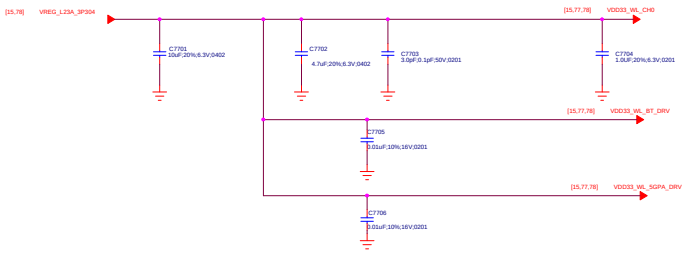

1.3V_RFA

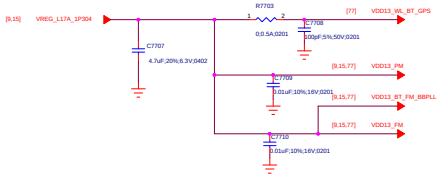

1.1V

1.8V_IO

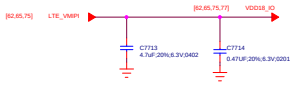

1.8V_XO

Title	77.WCN3950_IC		REV: V10
DOCUMENT NO.:	S88731_1_12_202007301614		Size D
DEPARTMENT:	HARDWARE DEPARTMENT	DESIGNER:	LIUXIAOFENG
Date:	Monday, July 27, 2020	Sheet 77 of 82	

WIFI GPS ANT

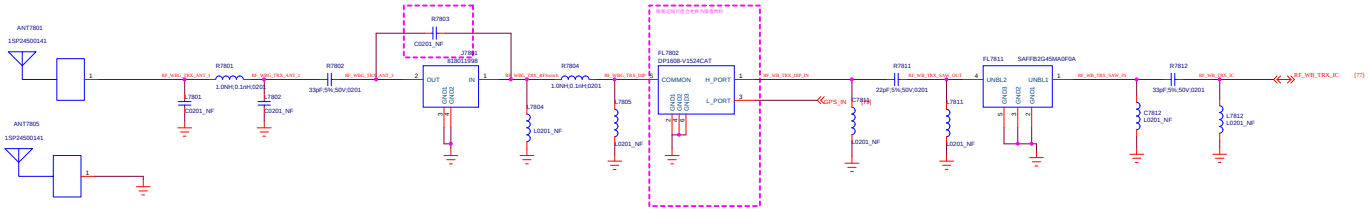

WIFI 5G ANT

测试座走线太绕，取消5G WIFI 测试座

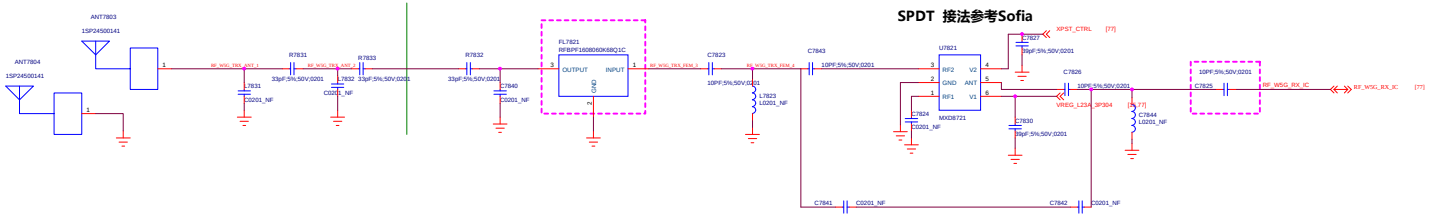

Title	78.WIFI_RF		REV: V10
DOCUMENT NO.:	S88731_1_12_202007301634		Size D
DEPARTMENT:	HARDWARE DEPARTMENT	DESIGNER:	LIUXIAOFENG
Date:	Monday, July 27, 2020	Sheet 78 of 82	

RF Port

[59,79] RX_GPS → WTR0_GPS [59]

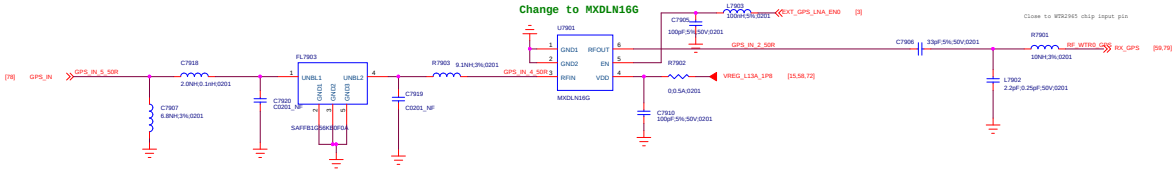

GPS

Title	79.GPS		REV: V10
DOCUMENT NO.:	S86731_1_12_202007301614		Size D
DEPARTMENT:	HARDWARE DEPARTMENT	DESIGNER:	LIUXIAOFENG
Date:	Monday, July 27, 2020	Sheet 79 of 82	

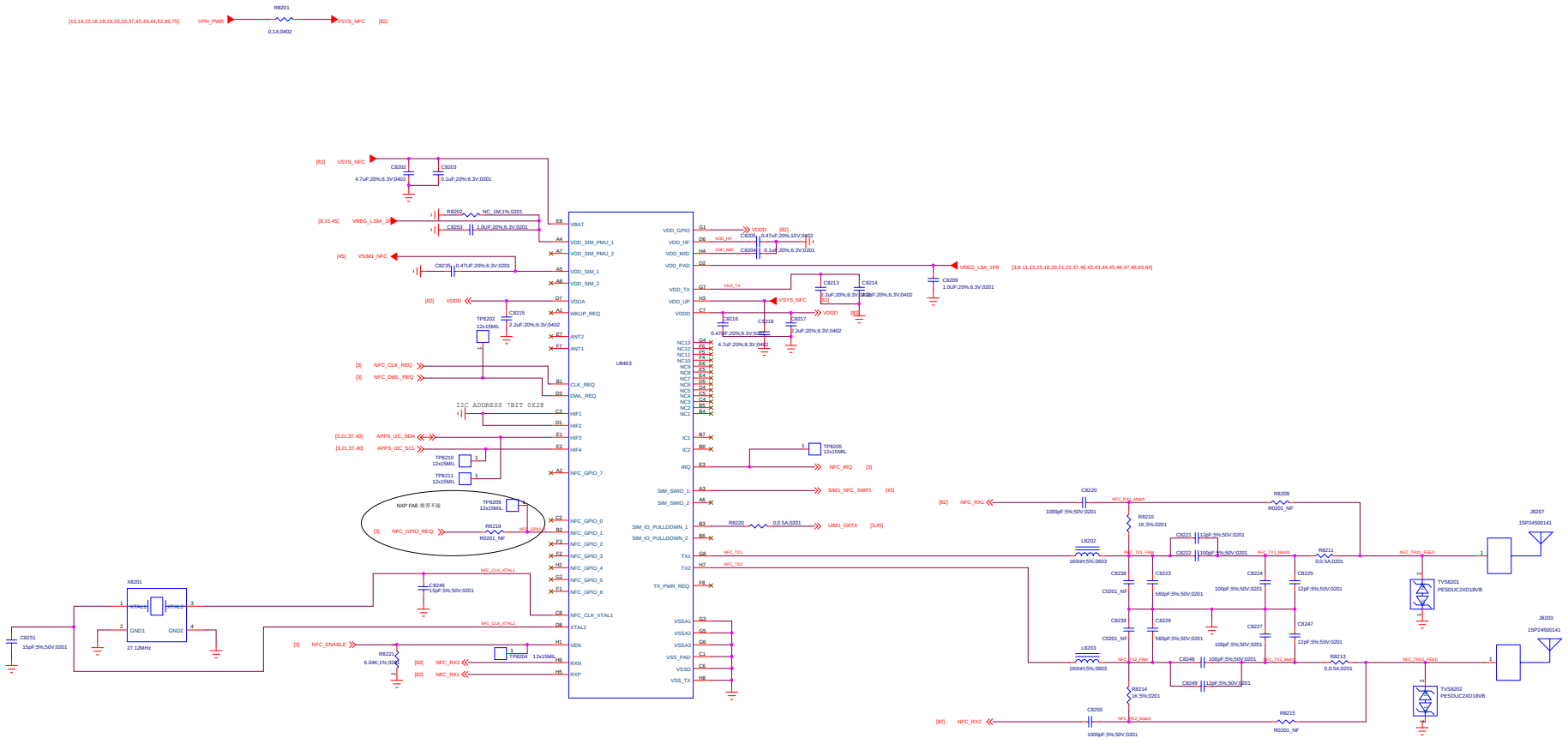

Title	SDM632+WTR3925 witch CA平台采用图	REV:	V10
DOCUMENT NO.:	WINGTECH-SH-HW-SCH001	Size	D
DEPARTMENT:	ShangHai-Hardware	DESIGNER:	WHF-HISQ
Date:	2018-03-15	Sheet	of

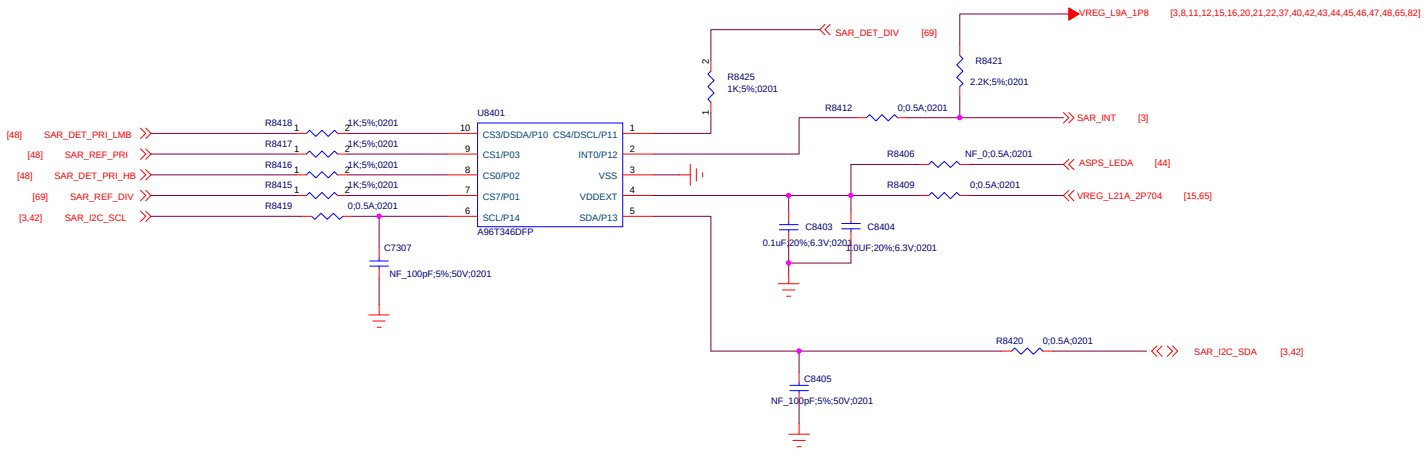

Title	Page Name = 84_SAR	REV: V10
DOCUMENT NO.:	Design Name = S88731_1_12_20200730134	Size C
DEPARTMENT:		DESIGNER = zhanglieqiang
WINGTECH		
Date: Page Modify Date = Monday, July 27, 2020	Sheet 84 of 84	